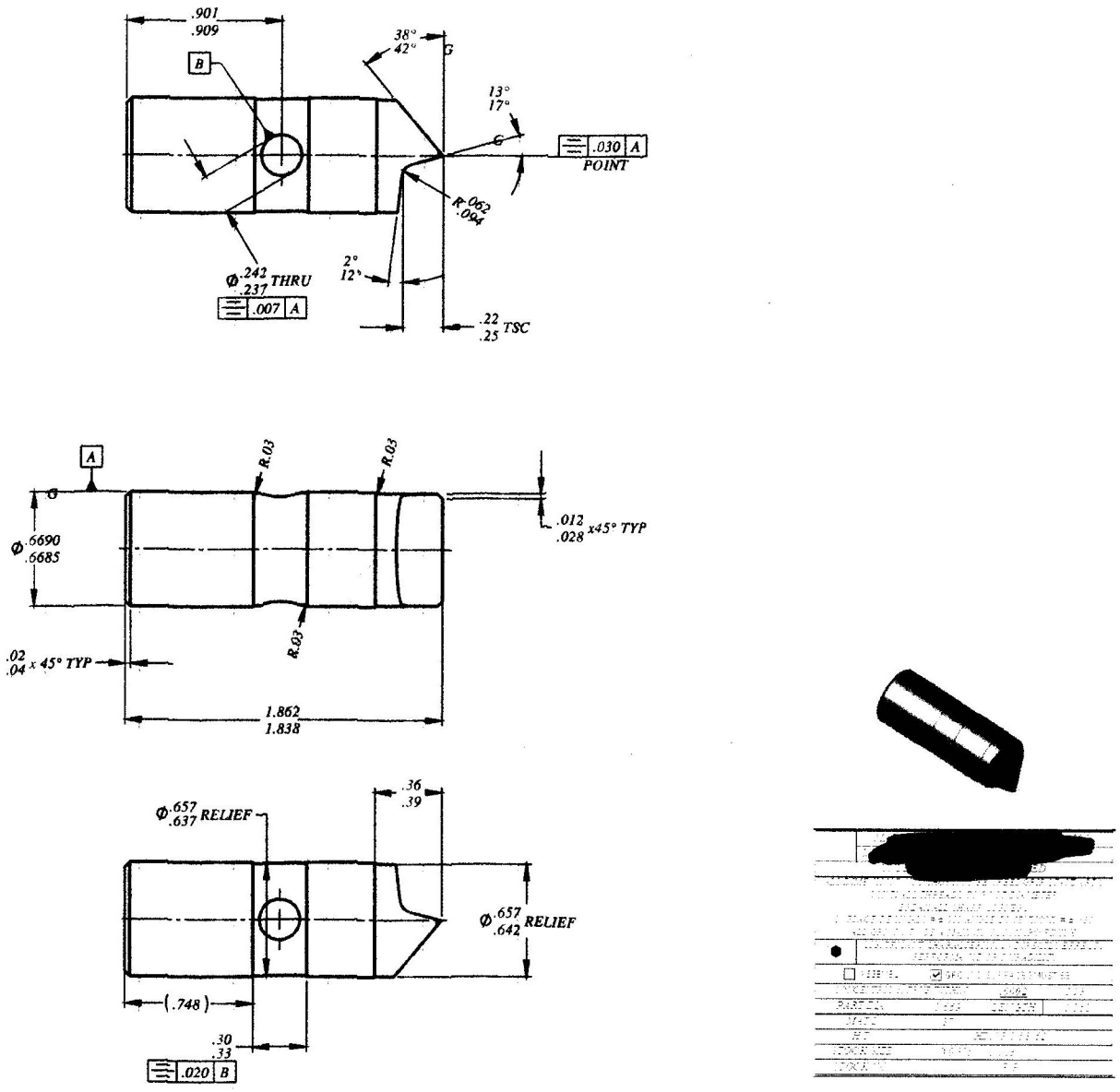

SERIES: 4263, 4264

[redacted]	CUSTOMER	ADDRESS	
	DRN: NEILSON / DET: NEILSON	CHK:	DATE: 09.15.15
	QUOTE: / JOB	USE WITH:	SIMILAR TO:
	CUSTOMER TOOL NO.	MADISON DRW. NO.	4399-121-14500
	SHT. NO. 1 / TOTAL SHTS 1 / SCALE: 2:1		