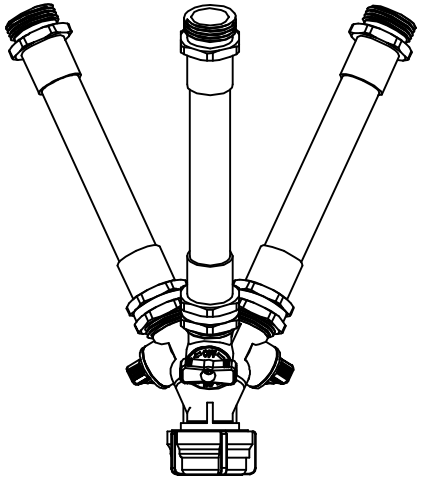

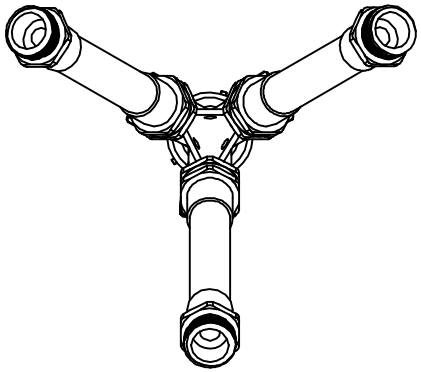

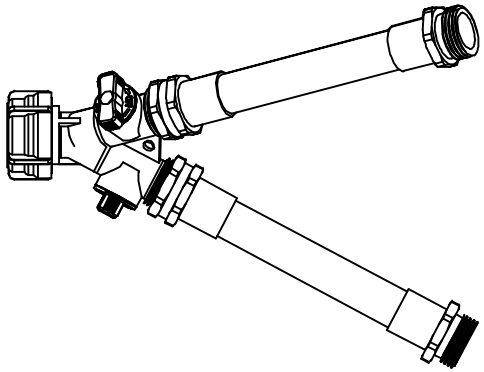

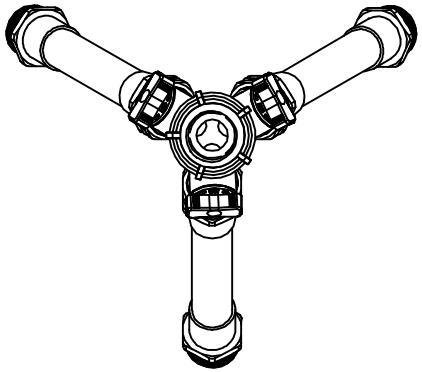

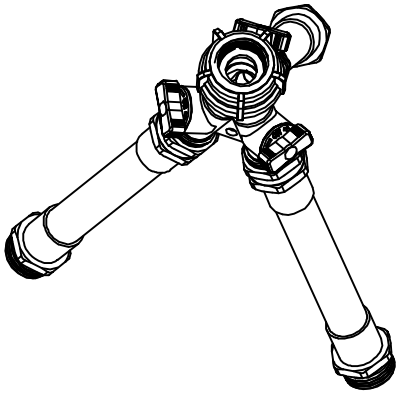

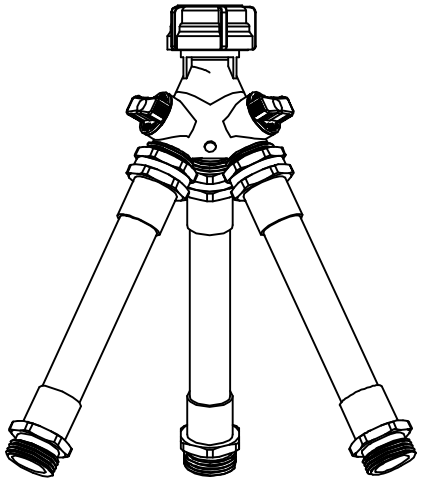

SMB®				DESCRIPTION	FINISHED PRODUCTS	SCALE	FIT	UNITS: MM	3RD ANGLE
				MODEL NO,					
APPROVED	CHECKED	DRAWING	DESIGNED	DRAWING NO,					
				FINISHING		△	07/10/2019		A0
				MATERIAL		SYM	DATE		REVISION

QR-025 2003.3.20 A1