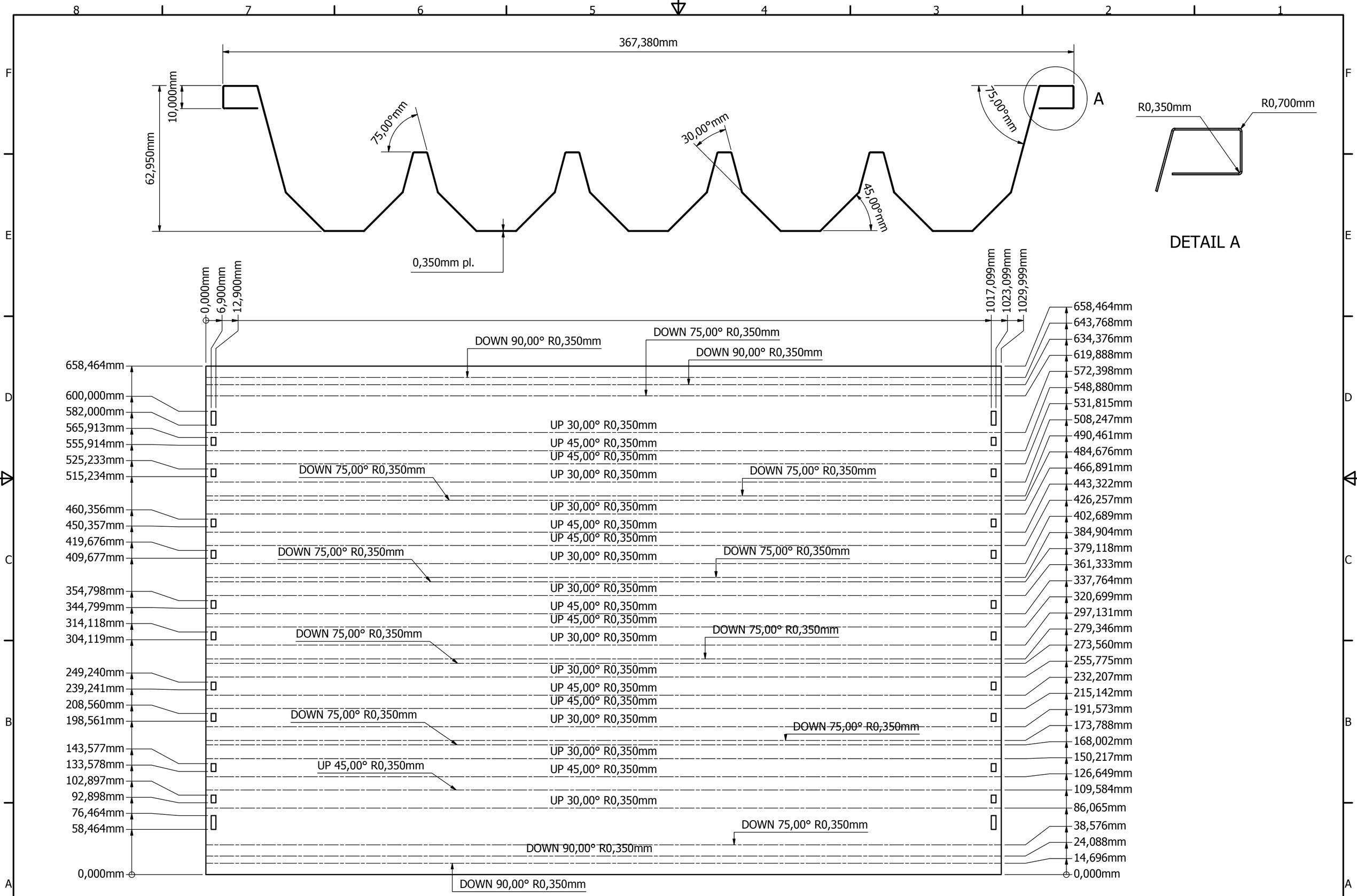
367,380mm
10,000mm
62,950mm
75,00°mm
30,00°mm
45,00°mm
75,00°mm
A
0,350mm pl.
R0,350mm
R0,700mm
DETAIL A
0,000mm
6,900mm
12,900mm
1017,099mm
1023,099mm
1029,999mm
658,464mm
600,000mm
582,000mm
565,913mm
555,914mm
525,233mm
515,234mm
460,356mm
450,357mm
419,676mm
409,677mm
354,798mm
344,799mm
314,118mm
304,119mm
249,240mm
239,241mm
208,560mm
198,561mm
143,577mm
133,578mm
102,897mm
92,898mm
76,464mm
58,464mm
0,000mm
DOWN 90,00° R0,350mm
DOWN 75,00° R0,350mm
DOWN 90,00° R0,350mm
UP 30,00° R0,350mm
UP 45,00° R0,350mm
UP 45,00° R0,350mm
DOWN 75,00° R0,350mm
UP 30,00° R0,350mm
DOWN 75,00° R0,350mm
UP 30,00° R0,350mm
UP 45,00° R0,350mm
UP 45,00° R0,350mm
DOWN 75,00° R0,350mm
UP 30,00° R0,350mm
DOWN 75,00° R0,350mm
UP 30,00° R0,350mm
UP 45,00° R0,350mm
UP 45,00° R0,350mm
DOWN 75,00° R0,350mm
UP 30,00° R0,350mm
DOWN 75,00° R0,350mm
UP 30,00° R0,350mm
UP 45,00° R0,350mm
UP 45,00° R0,350mm
DOWN 75,00° R0,350mm
UP 30,00° R0,350mm
DOWN 75,00° R0,350mm
UP 30,00° R0,350mm
UP 45,00° R0,350mm
UP 45,00° R0,350mm
UP 30,00° R0,350mm
DOWN 75,00° R0,350mm
DOWN 90,00° R0,350mm
DOWN 90,00° R0,350mm
658,464mm
643,768mm
634,376mm
619,888mm
572,398mm
548,880mm
531,815mm
508,247mm
490,461mm
484,676mm
466,891mm
443,322mm
426,257mm
402,689mm
384,904mm
379,118mm
361,333mm
337,764mm
320,699mm
297,131mm
279,346mm
273,560mm
255,775mm
232,207mm
215,142mm
191,573mm
173,788mm
168,002mm
150,217mm
126,649mm
109,584mm
86,065mm
38,576mm
24,088mm
14,696mm
0,000mm

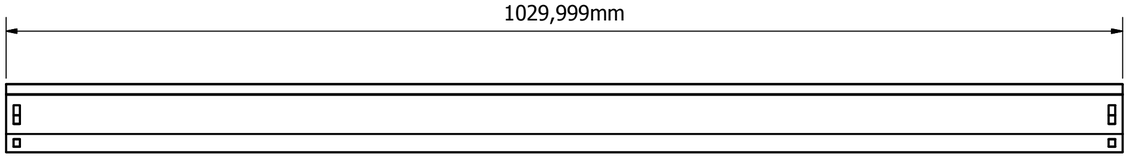
1029,999mm

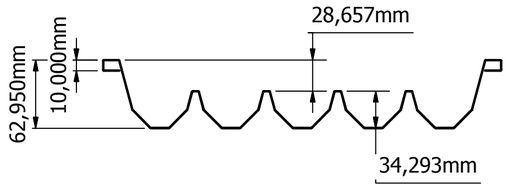
28,657mm
62,950mm
10,000mm
34,293mm

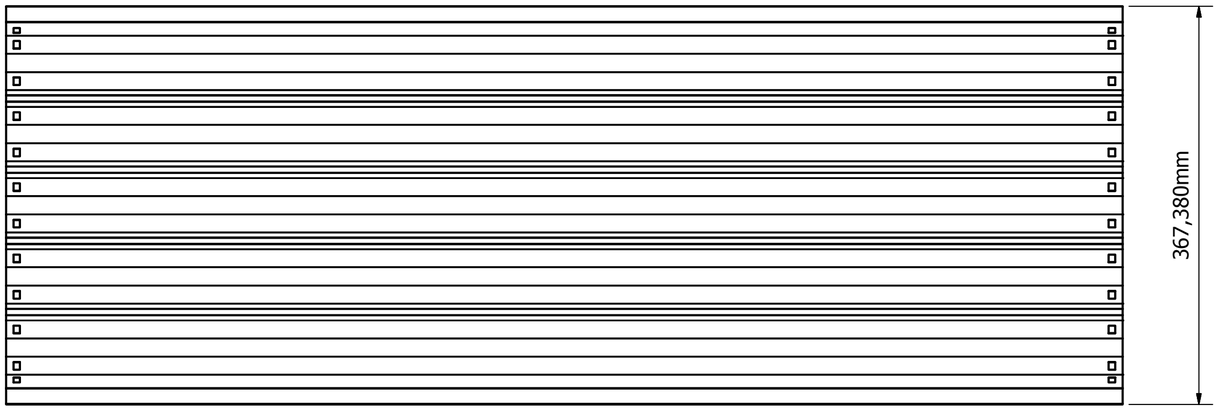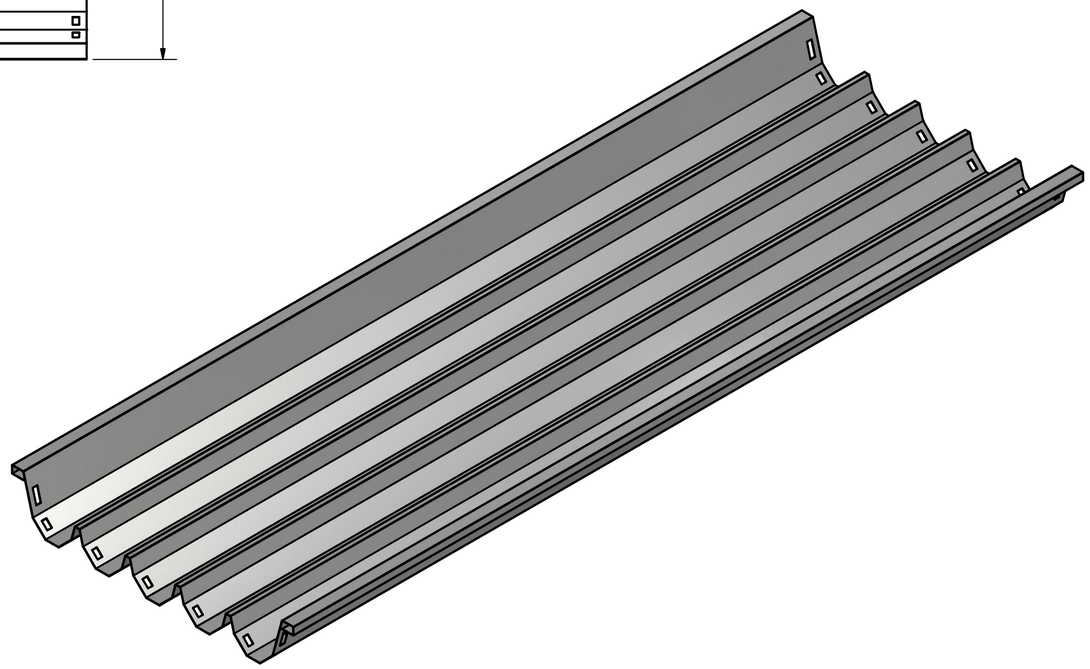
367,380mm