DOCUMENT	DOCUMENT PART	DESCRIPTION	MATERIAL MASTER	MATERIAL SPECIFICATION	MATERIAL MARKING	COATING
1458101	001	BODY, HPBFV, 36-150L, CFBM	S36-150L-209	ASTM A351 CFBM	CFBM ▽	NONE
1458101	002	BODY, HPBFV, 36-150L, WCB	S36-150L-238	ASTM A216 WCB	WCB ▽	GRAY POWDER COAT

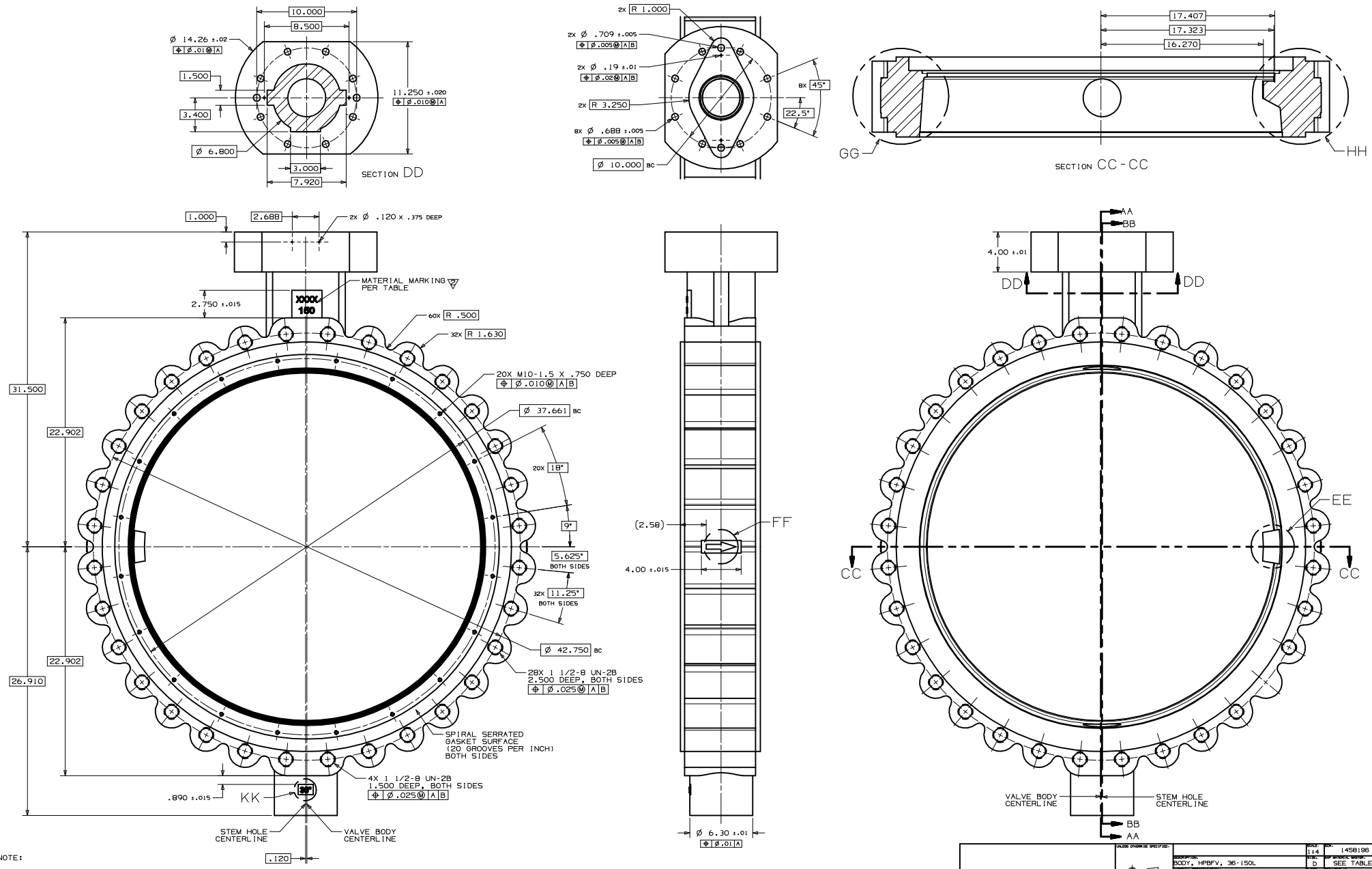

NOTE:

1. BREAK ALL SHARP EDGES.
2. MATERIAL MARKING = SEE TABLE.

UNLESS OTHERWISE SPECIFIED:	SCALE: 1:4	DWG. 1458196	
DESCRIPTION: BODY, HPBFV, 36-150L	SIZE: D	MAP MATERIAL MASTER: SEE TABLE	
MATERIAL SPECIFICATION: SEE TABLE	SHEET: 1/2	DOCUMENT NO: 1458101	REV: 00
SURFACE FINISH (WHEN MARKED WITHOUT VALUE): 63 ALL FINISHED GOODS ARE SUBJECT TO APPROVAL BY PRODUCT MANAGEMENT, TO INCLUDE VERIFICATION OF AESTHETIC QUALITY.	DOCUMENT UNCONTROLLED OUTSIDE OF SAP. DIMENSIONED PER ASME Y14.5 (2009).		