Serial number	TAG number	Sealing air valve serial number
190059 190060		190101 190102

ITEM NO.	DocID	Description	Material	Spare Part	QTY.
1	18-18471	Adaptor SW22 --> SW27	ELVZ STEEL	Spare	1
2	18-21494	Adaptor SW17 --> SW22	ELVZ STEEL	Spare	1
3	19-30536	Switchbox EAE4M01-3D (4) SPDT contacts silver plated 10A@250 VAC - 2,5A@ 24VDC / with bracket	SUPPLIER SPECS	Spare	1
4	19-30544	Actuator GS0240-5,6 F10/F12 AFO	SUPPLIER SPECS	Spare	1
5	19-30615	DSK-D 01 DN500 DIN86044 / SA DN50 PN10 / 2 BOLTS / UCF	SEE BOM	N.A.	1

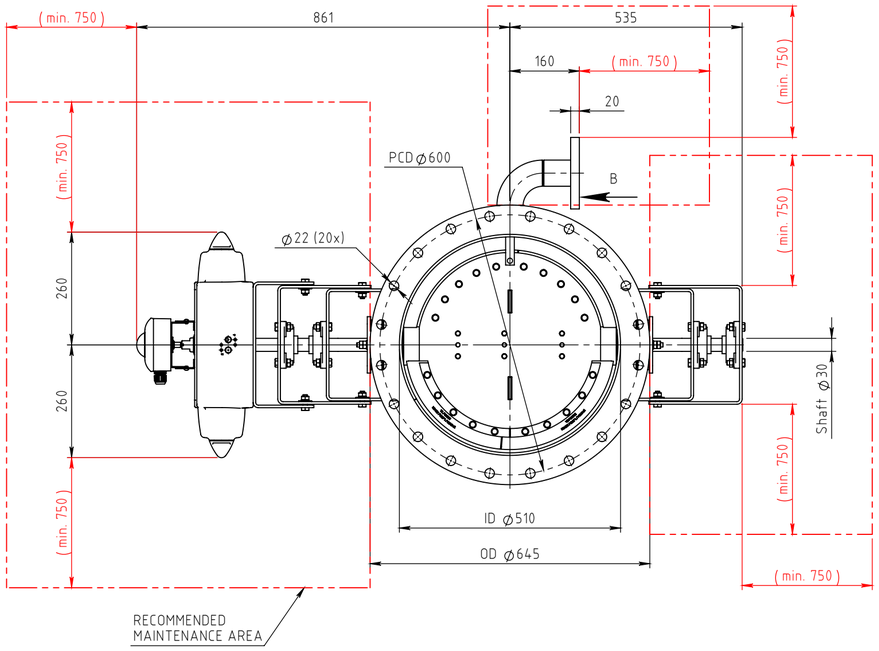

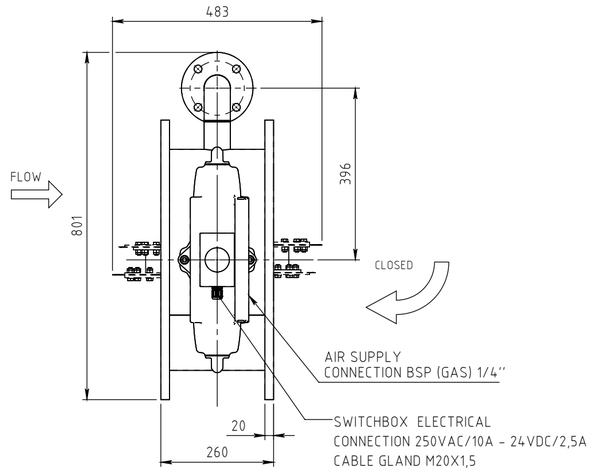

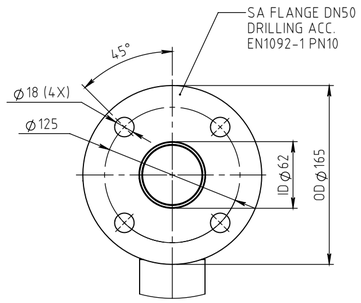

VIEW B
SCALE 1 : 4

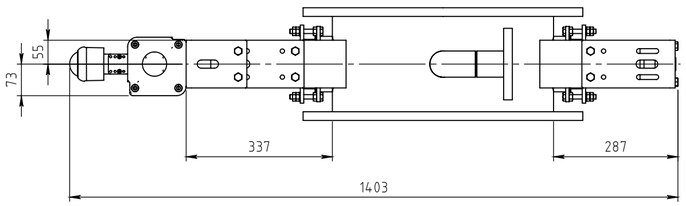

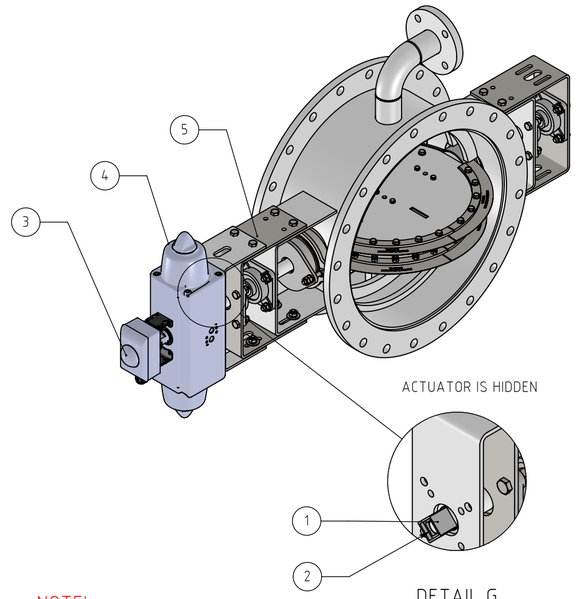

DETAIL G
SCALE 1 : 5

NOTE!
VALVE FLANGE-DRILLED ACC. DIN86044.

SURFACE TREATMENT: SYSTEM 1

SURFACE PREPATRATION:
SAND BLASTING ACC. ISO8501-1 Sa2-2½

SEQUENCE / TYPE / DFT (µm) ± / COLOR / COMPONENT

1ST LAYER / PROTECTION COAT / 25 ± 5 / ANTRACITE / 1C

EUR PROJ.	VVC vent + valves + controls	GEN. TOL. & SURFACE CONDITIONS			FINISH: SYSTEM 1	QTY: SEE ORDER LIST
		Machining	Bending	Welding	–	–
		–	–	ISO13920-BCF	–	–
REMARK:					A.00 FIRST ISSUE	CVR 25/01/2019
MAT: SEE BOM	MASS (KG+/-10%): 169	NAME	DATE		REV DESCRIPTION	NAME DATE
DESIGN PRESS (PS) BARG: 0.1		DRAWN	NK	23/01/2019	TITLE: DSK-D22 S235/S235/AISI304 DN500 DIN86044 / SA DN50 PN10 / 2" / SB 2 BOLTS / A / GS / UCF	
MAX.DESIGN PRESS. DROP BAR: 0.1		CHK'D	–	–		
DESIGN TEMP. (TS) °C: 400		Q.A.	CVR	25/01/2019		
LEAKAGE APPR: <0,5%					DRW N° 19-30577	SCALE 1:10
MOUNT WITH ACTUATOR SHAFT HORIZONTAL						A2
ROTATION DIRECTION: CW CLOSE						
SUBJECT TO TECHNICAL MODIFICATION © V.V.C. 2019					DOCID: 19-30577	SHEET 1 OF 1

UNLESS OTHERWISE SPECIFIED DIM IN MM, ANGULAR IN DEG. ALL INFORMATION ON THIS DRAWING IS PROPERTY OF VVC. ALL REPRODUCTION AND UNAUTHORIZED USE WITHOUT EXPLICIT PERMISSION OF VVC IS PROHIBITED.