Total 2/1 To: 杨工

NO. 001 变压器

Page 1

0755-33260015

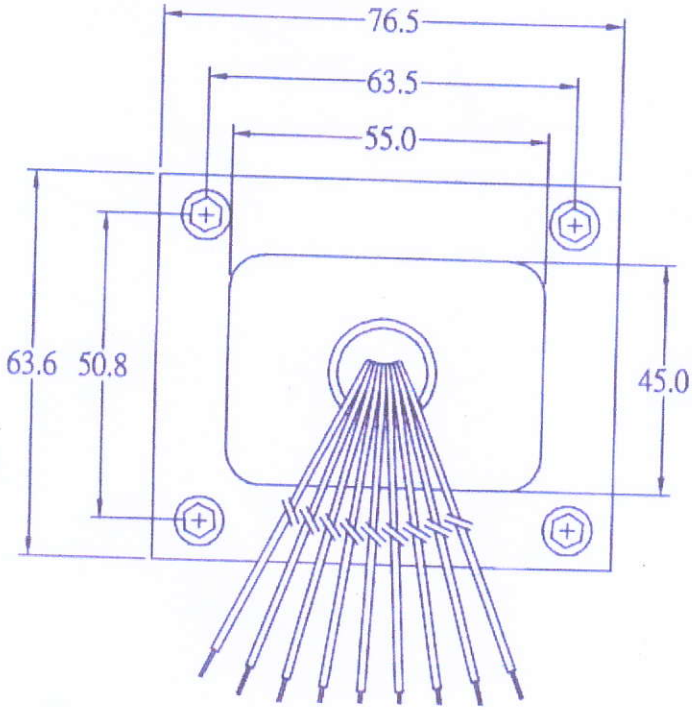

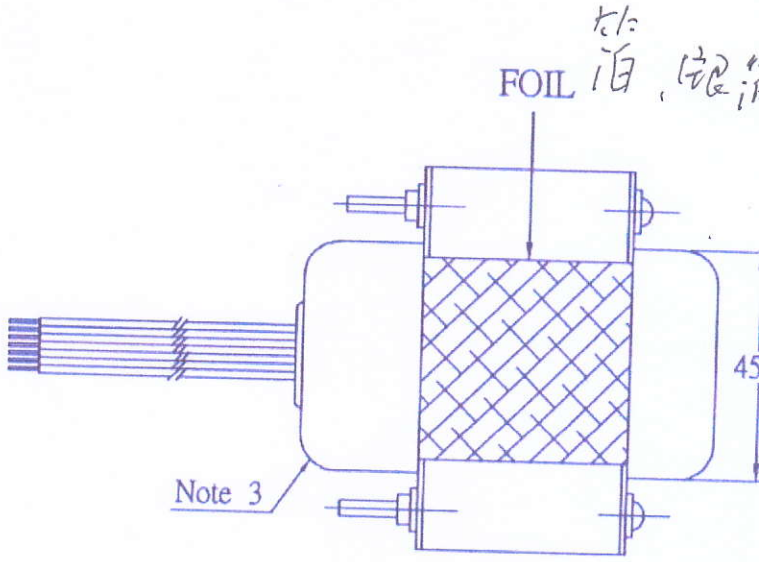

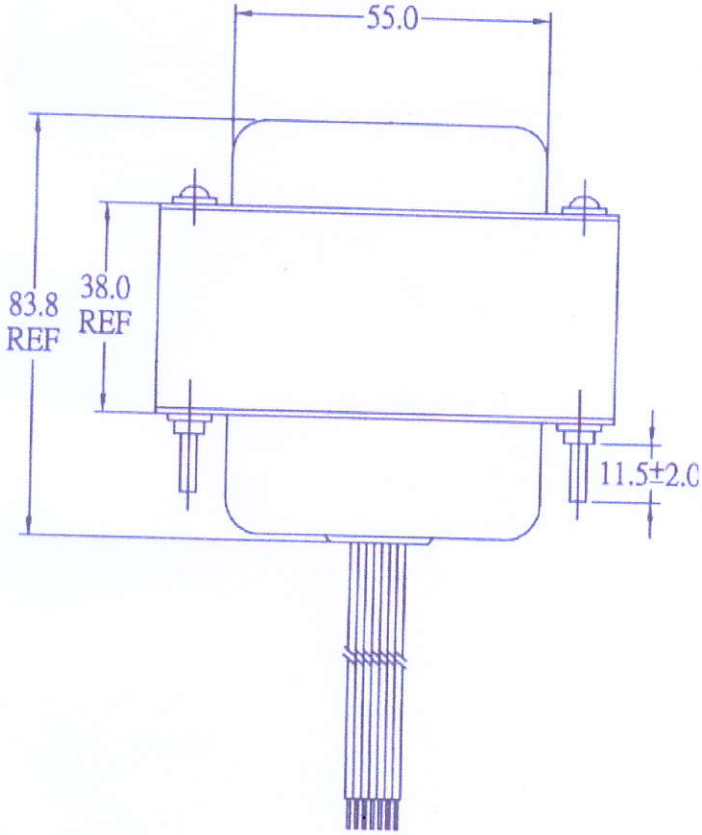

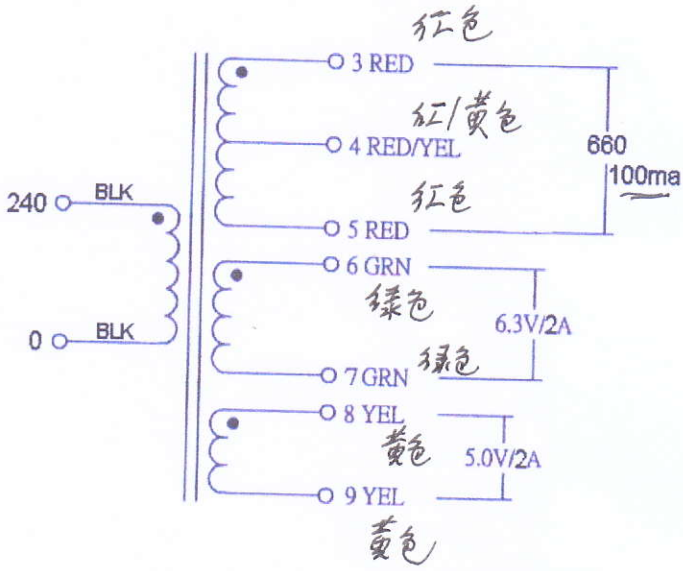

All dimensions are in mm 所有尺寸是mm

ELECTRICAL DATA 电气性能

Exciting current: 240V, 50 Hz, 230 mA Max
励磁电流: 240V, 50Hz, 230mA max 最大

DCR (@ 20C, ± 20%):
DCR (@ 20C, ±20%):
-BLK/BLK=19.647 Ohm — 黑/黑=19.647欧
-RED/RED=334.817 Ohm — 红/红=334.817欧
-GRN/GRN=0.2135 Ohm — 绿/绿=0.2135欧
-YEL/YEL=0.175 Ohm — 黄/黄=0.175欧

Primary voltage: 240V 50Hz
初级电压: 240V 50Hz

Secondary voltage: 660 VCT @100mA, 6.3V @2A, 5V @2A
次级电压: 660VCT @ 100mA 6.3V @ 2A, 5V @ 2A

No load voltages: 698.6 VCT, 6.76V, 5.35V
没有负载电压: 698.6VCT, 6.76V, 5.35V

NOTES:
1. ALL LEAD WIRES ARE #18AWG, UL1015; LENGTH 304.8 ± 10.0mm , S&T 6.35 ± 1.0mm.
2. SCREW : #8-32.
3. THE FINISH ON THE END BELLS TO BE BLACK.

1. 所有引线是 #18 平均线规, UL1015
长度 304.8±10.0mm, 线槽: 6.35±1mm
2. 螺丝: #8-32
3. 表面处理在屏罩底部是黑色的