EXTERNAL INVOLUTE SPLINE DATA		
PER ANSI B92.1 – 1970		
TYPE FLAT ROOT SIDE FIT		
CLASS		6
NUMBER OF TEETH		52
PITCH		16/32
PRESSURE ANGLE		30°
PITCH DIA. (REF.)		3.2500
BASE DIA. (REF.)		2.8146
FORM DIA.		3.181
CIRCULAR SPACE WIDTH	MAX. ACTUAL	0.0982
	MIN. EFFECTIVE	0.0935
MIN. MEASURE OVER PINS		3.4302
PIN DIA.		0.1200
MINOR DIA. MIN.		3.150
MAJOR DIA.	MAX.	3.312
	MIN.	3.290

⊕ | A | .005 DIA.

INTERNAL INVOLUTE SPLINE DATA		
PER ANSI B92.1 – 1970		
TYPE FLAT ROOT SIDE FIT		
CLASS		6
NUMBER OF TEETH		34
PITCH		16/32
PRESSURE ANGLE		30°
PITCH DIA. (REF.)		2.1250
BASE DIA. (REF.)		1.8403
FORM DIA.		2.192
CIRCULAR SPACE WIDTH	MAX. ACTUAL	0.1025
	MIN. EFFECTIVE	0.0982
MAX. MEASURE BTW PINS		1.9774
PIN DIA.		0.1080
MAJOR DIA. MAX.		2.213
MINOR DIA.	MAX.	2.068
	MIN.	2.063

⊕ | A | .005 DIA.

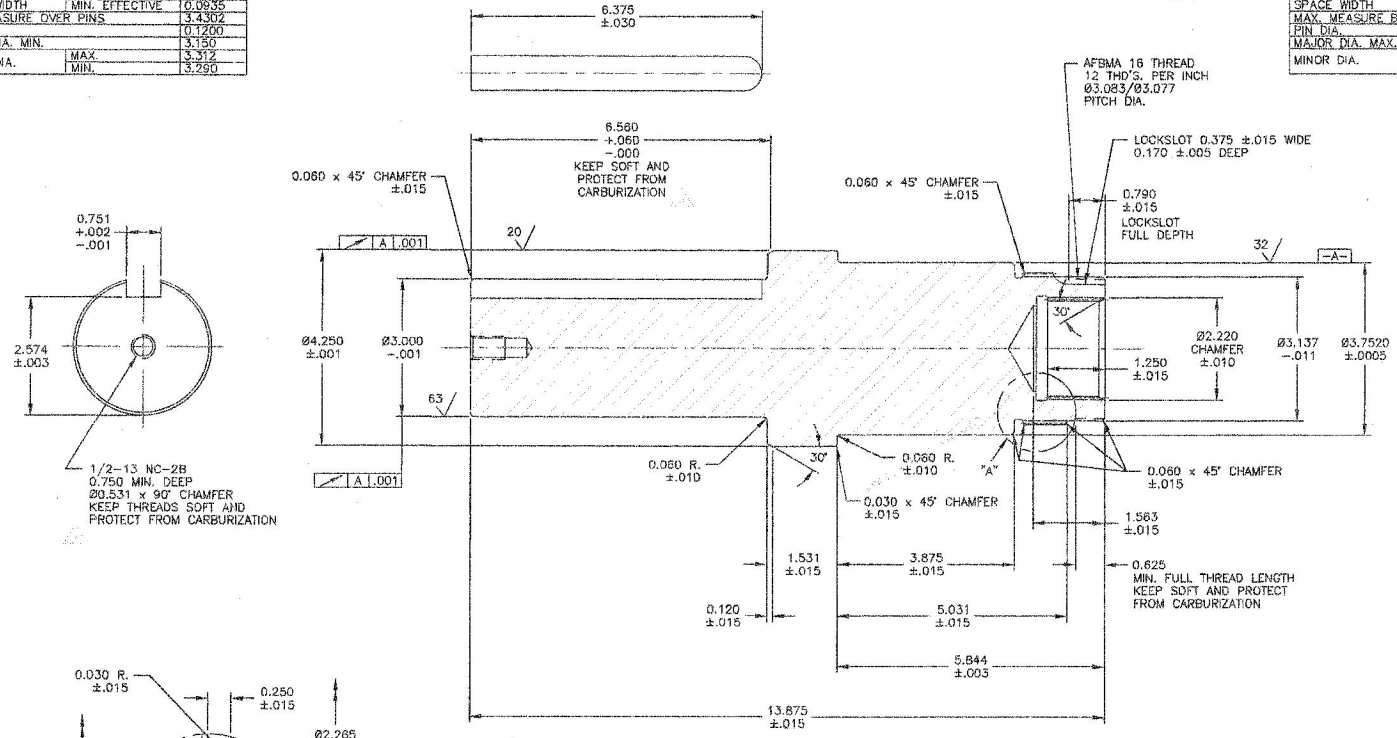

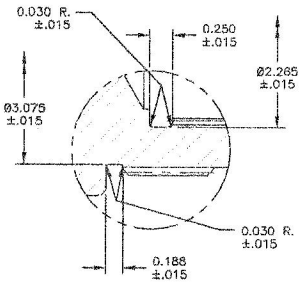

VIEW "A"
SCALE: 2X

HARDNESS NOTE:

Rc 57–63 UNLESS NOTED
CASE DEPTH 0.010–0.020
Rc 27–41 CORE HARDNESS
0.250 DEEP IN CARBURIZED AREAS

REV.	DATE	ECN NO.	BY	CK.
4	08-03-99	88-11064	JDM	BR
3	06-09-99	88-11054	JDM	JGK
2	07-14-94	88-10610	DWP	DM
1	03-22-93	88-10531	TJR	DM
0	10-12-92	88-10485	TJR	

REXNORD ENGINEERING SPECS.
MAT'L. SPECIFICATIONS:
QUALITY REQUIREMENTS: QR1
QR3

ITEM	QTY.	PART NO.	DESCRIPTION

MATERIAL NOTE: SAE 8620H
PROCESS NOTE: SEE NOTE
EFF CASE DEPTH: SEE NOTE
SCALE: 1:1 WEIGHT: 34.0#
ENG. BY: TJR DATE: 10-07-92
CHK. BY: DM DATE: 10-11-92
APPR. BY: DM DATE: 10-11-92
UNLESS NOTED: X ± .1 .XX ± .05 .XXX ± .010 ∠ ± 1°
TITLE: SHAFT INPUT
PART NO.: SR5100105
DRAWING NO.: SR5100105
REV.: 4

100 pc / YEAR