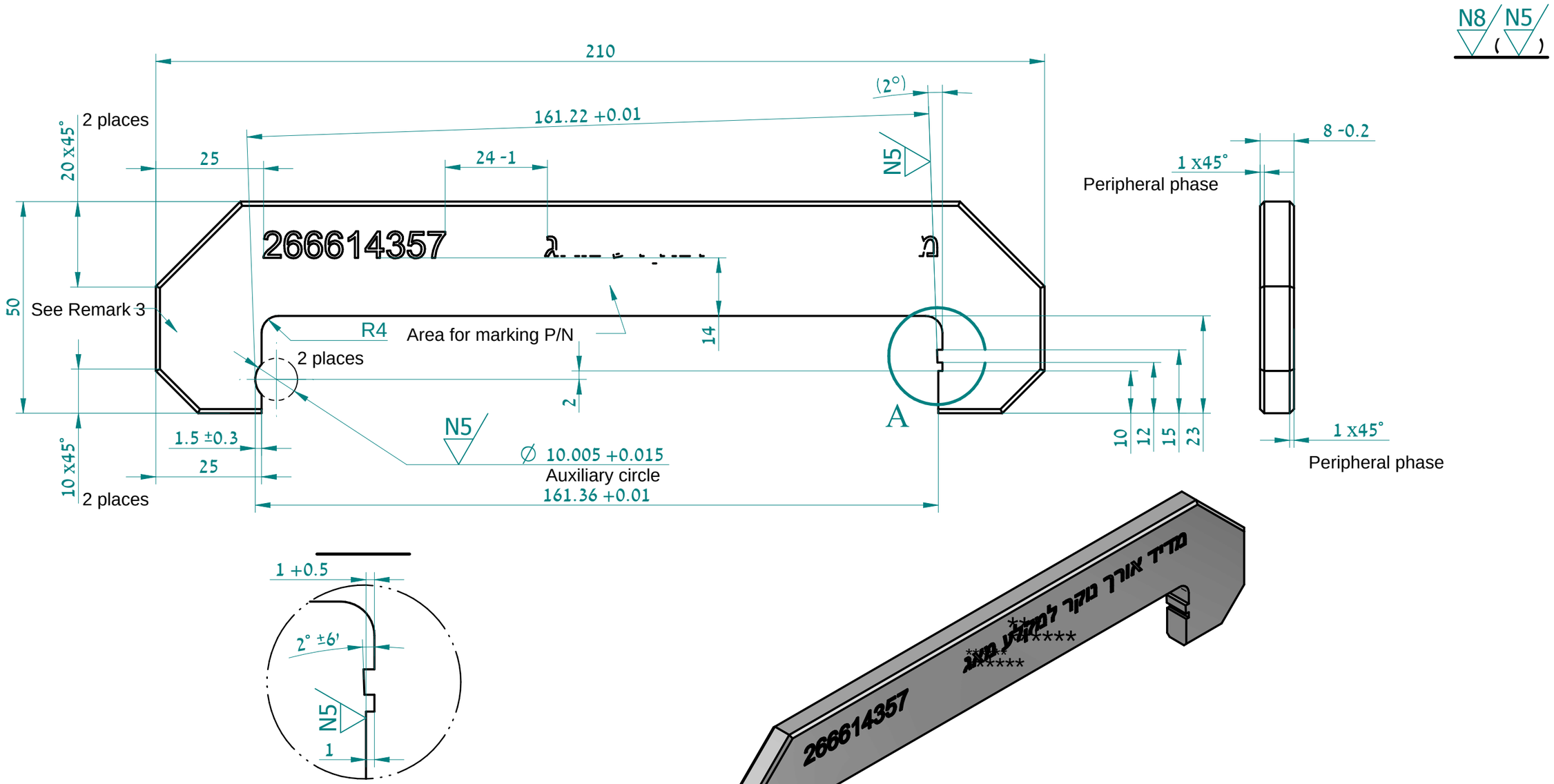

Remarks to drawing number 30330068398
(All dimensions are in mm)
Tolerances: +/-0.2 mm , +/-3°
Material: Any tool steel
1.Dull Squares 0.2 +0.2 mm
2.Harden & Release to Hardness 60 +/-3 HRC according to standard MIL-H-6875.
Apply with Rustproof oil such as 9173 or equal.