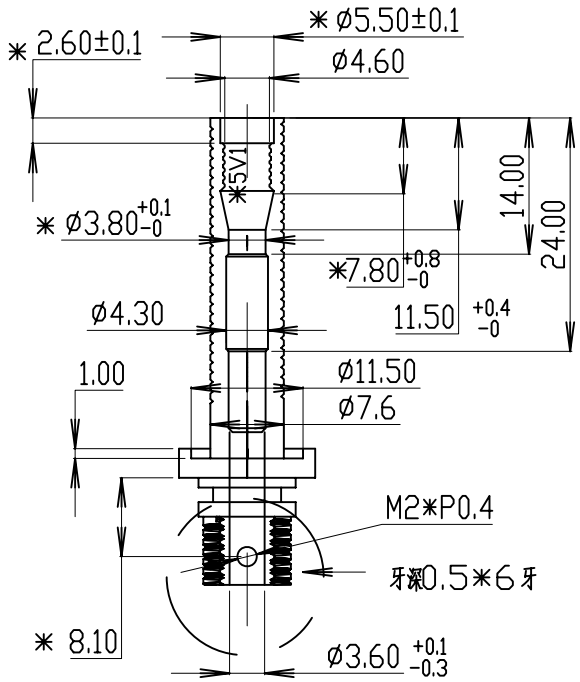

NOTED:

1:不得有毛刺，气孔，裂缝等影响使用的缺陷。

2:5V1内螺纹小径为Ø4.7±0.1.　8V1外螺纹大径为Ø7.74-0.19

3: 零件表面需要阳极氧化处理

4: 未注公差: ±0.15

5: ✳ 为重点检验尺寸

6: 配件: 配套气门芯

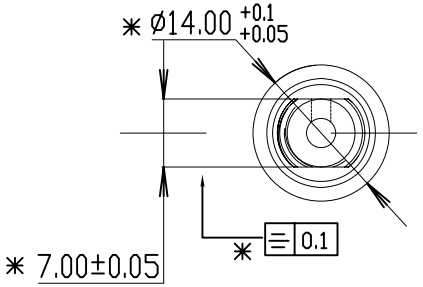

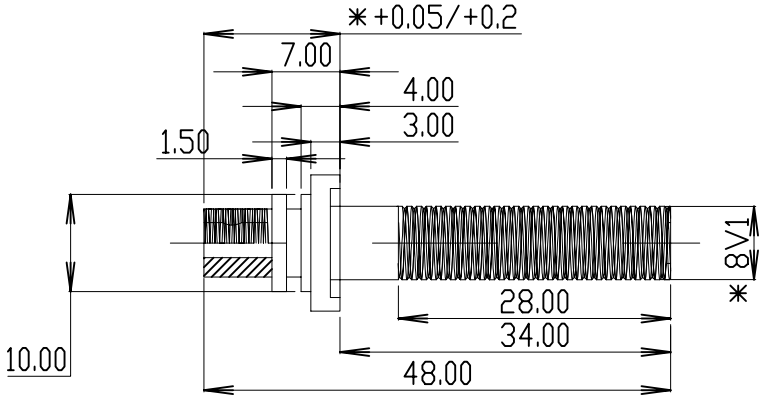

TOOLING LIFE:			
SIZE:			
QTY:	SUP:		
MAT'L: AL 6061			
GENERAL TOLERANCES			
	DIMENSION	TOLERANCES	
LINEAR	0	±0.5	
	0.0X	±0.3	
	0.00X	±0.1	
	0.000X	±0.05	
ANGLE	X°	±1°	
	X.X°	±0.5	
FINISH			
DRAWING PARTS REFER TO THE VERSATE STANDARD.			

MARK	DESCRIPTION	MODIFICATION BY	DATE

DRAWN BY :	REVIEWED BY :	APPROVED BY :	CUSTOMER :
DATE : DATE			CUSTOMER PART NO:
UNIT :	SCALE :	DESCRIPTION : 气嘴	
		DRAWING NO :	
Chaoshing Electronic Technologies CO LTD		SIZE : A 3	SHEET :
			BOM ITEM :