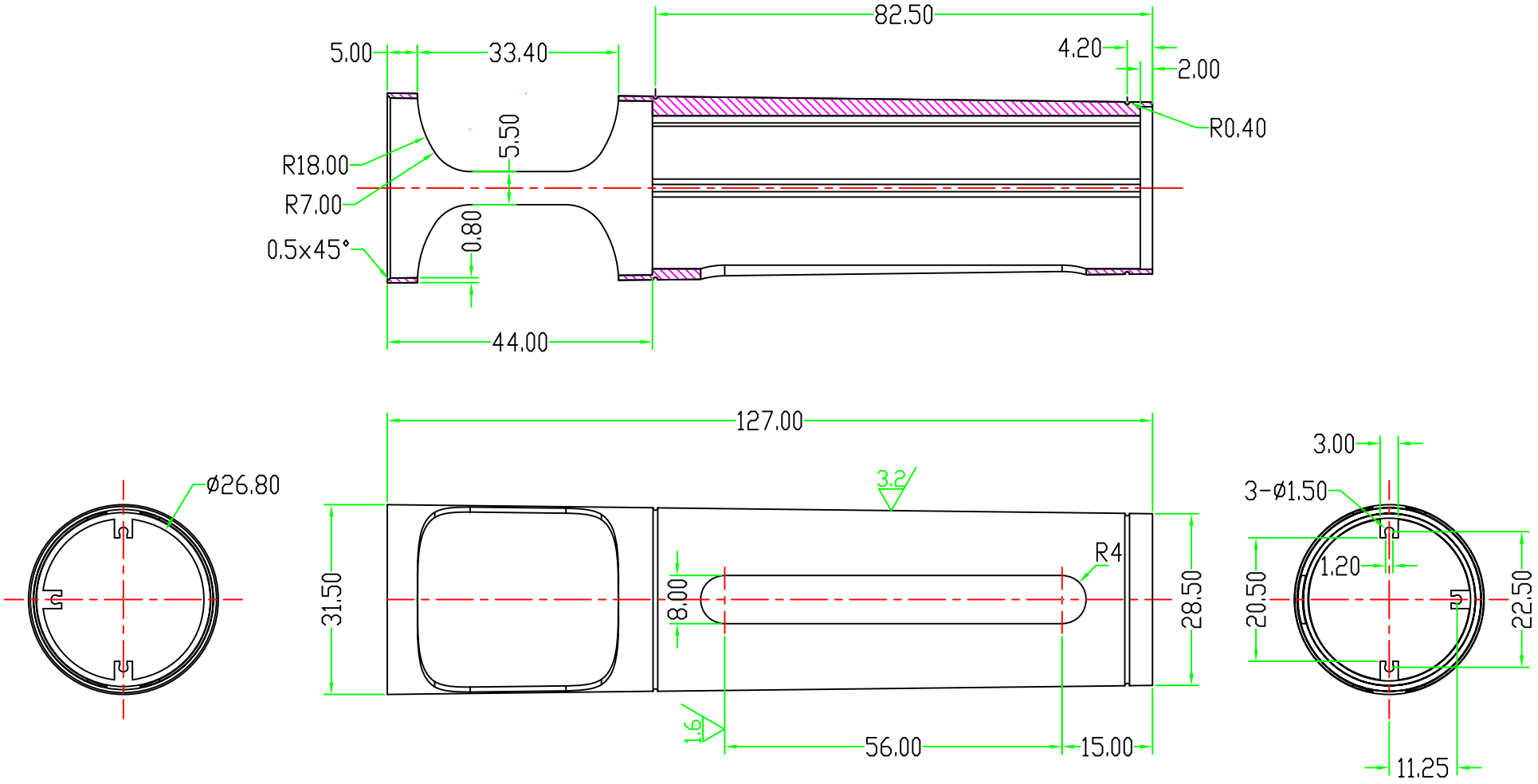

材料：铝
表面处理： 喷砂 氧化

ITEM	DESCRIPTION	DRAW	APPD	PART NO.	DATE

DRAWING CHANGE RECORD

ACE ELECTRONICS LIMITED A4

TITLE : 铝外壳		MODEL : K歌宝	PAGE :
REV :	DATE	MAT'L :	QTY. :
DRAW : Z Q F	2017.05.04	PART NO. :	SCALE : 1 : 1
CHECK :		FILE NAME :	UNIT : MM
APPD :			

Unless otherwise specified
tolerance X.= ± 0.1
0ANGLE = ± 0.5°