THIS DOCUMENT IS THE PROPERTY OF ISRAEL MILITARY INDUSTRIES LTD (IMI). IMI RESERVES ITS RIGHTS IN THEIR ENTIRETY TO THIS DOCUMENT AND TO THE DATA/INVENTION CONTENT HEREIN DISCLOSED. THIS DOCUMENT MAY NOT BE USED, EXPLOITED, REVEALED OR DISCLOSED IN WHOLE OR IN PART, TO ANY OTHER PARTY AND IT SHALL NOT BE DUPLICATED,USED OR COPIED IN ANY FORM WITHOUT THE EXPRESS PRIOR WRITTEN PERMISSION OF IMI'S AUTHORIZED PERSON. ACCEPTANCE OF THIS DOCUMENT WILL BE CONSTRUED AS ACCEPTANCE OF THE FOREGOING CONDITIONS.

CLAASIFICATION OF CHARACTERISTICS		NO	BEFORE	NOW	DATE	APVD	NO	BEFORE	NOW	DATE	APVD
CRITICAL -	MAJOR -	01	8.4	7.9	15/09/11	Elad-z	02	7.9	7.9 +0.1	22/05/12	Eli-A
MINOR - ALL OTHER CHARACTERISTICS		03	--	UPD. COATING	02/12/13	Ezra	04	--	Add Drilling&Note 5	26/01/14	Elad-Z
		05	---	REDESING	26/02/14	Elad_Z	06	--	add dimensions	03/11/14	Elad-z
		07	R1.1	R1.4	10/12/15	elad_zo	08	# of DIM	ACC to MRB 26/1/16	27/01/16	elad_zo
		09	6.8+0.05	6.8±0.05	18/02/16	elad_zo					

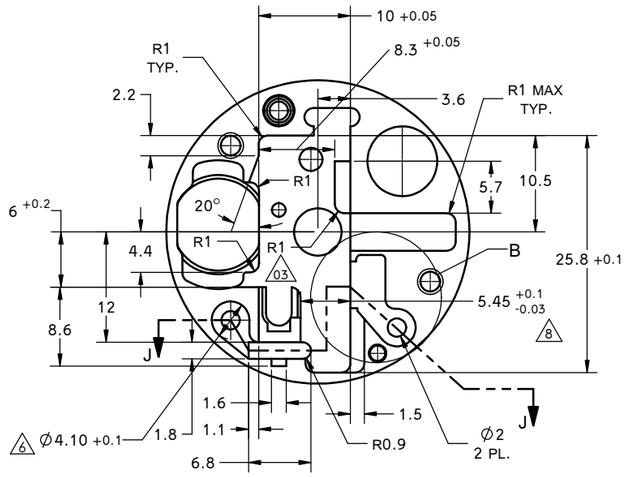

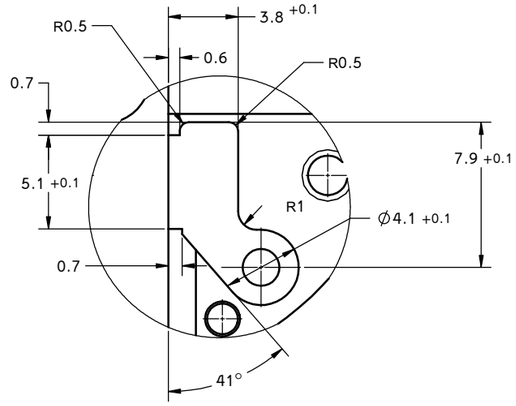

DETAIL B
SCALE 6 : 1

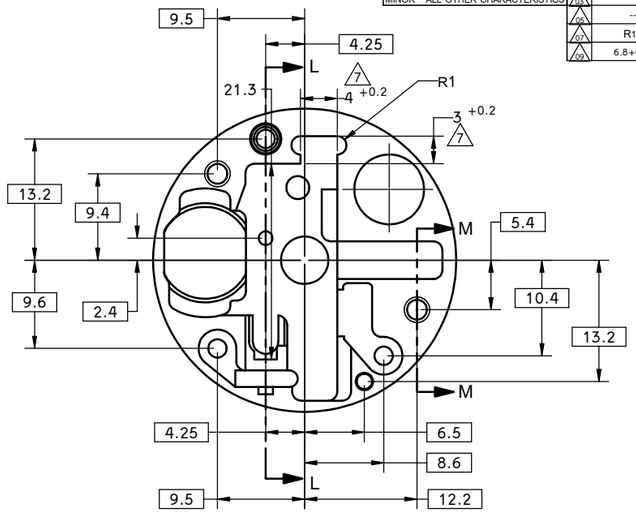

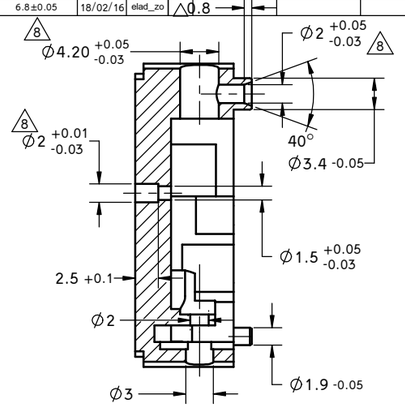

SECTION L-L

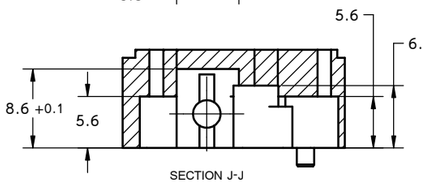

SECTION J-J

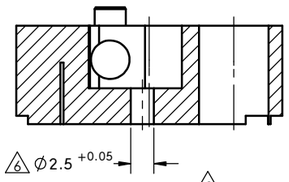

SECTION P-P
Drilling two diameter hole cavity

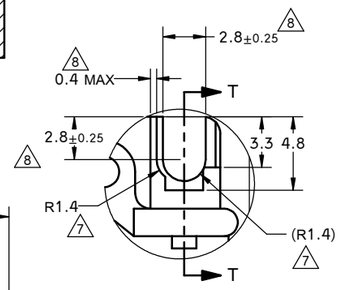

DETAIL R
SCALE 5 : 1

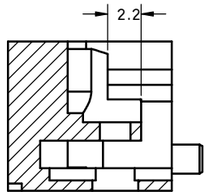

SECTION T-T
SCALE 5 : 1

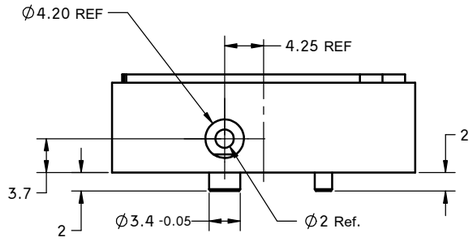

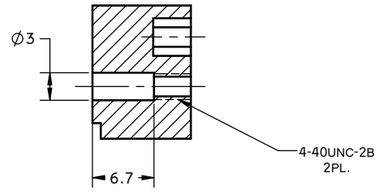

SECTION M-M

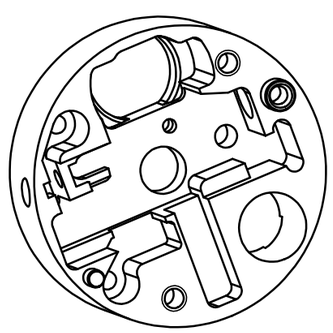

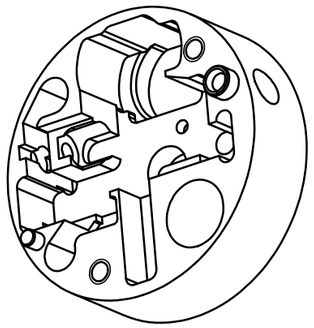

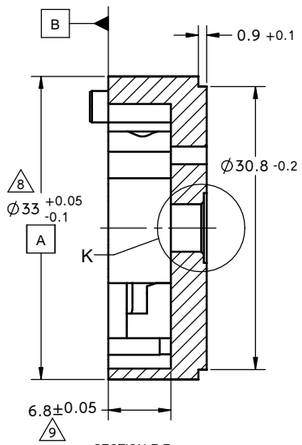

SECTION F-F

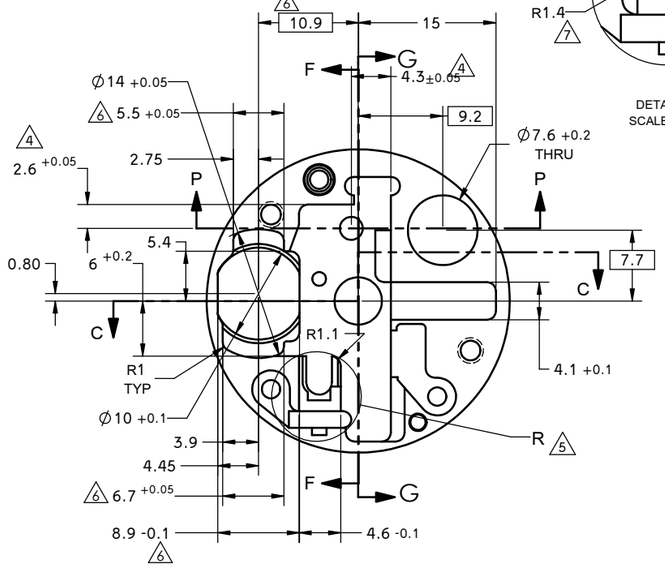

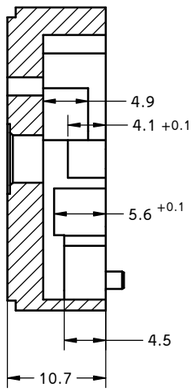

SECTION G-G

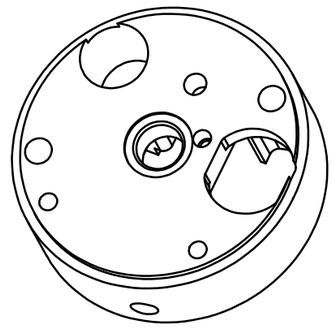

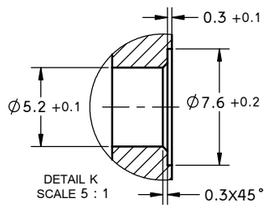

DETAIL K
SCALE 5 : 1

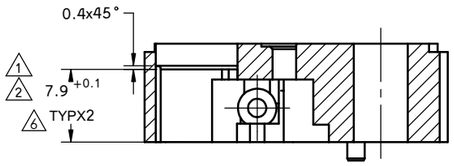

SECTION C-C

NOTES:
1) MATERIAL: ALUMINUM CASTING ALLOY A380 OR A356.
2) ALL BASIC DIMENSIONS ARE : ⌖ 0.1 A B
3) BREAK SHARP EDGES R0.2 MAX.
4) PROTECTIVE FINISH: ELECTROLESS NICKEL PER MIL-C-26074 CLASS 2 THICKNESS 5 MIC. TO 8 MIC.

MATERIAL:	SEE NOTE No. 1
SPECIAL TREATMENT:	
PAINTING/COATING:	SEE NOTE No. 4

	NAME	SIGN	DATE	REPLACES DWG	CLASSIFICATION	SCALE	UNLESS OTHERWISE SPECIFIED TOLERANCES ARE LINEAR ±0.1 ANGULAR ±0.5°	REV
DSGN	Eli Cohen		05/06/11		UNCLASSIFIED	3:1		09
CHK	shain_s		05/06/11	PLANT		WEIGHT	SHEET OF	DRAWING NO 216826-1
PROD.C				CENTRAL LAB				
APVD	Yossi Reich		05/06/11					

MUNITION SYSTEMS DIVISION

NEXT ASSY

NAME: HOUSE S&A

CATALOG NO 16-137-1510

A1