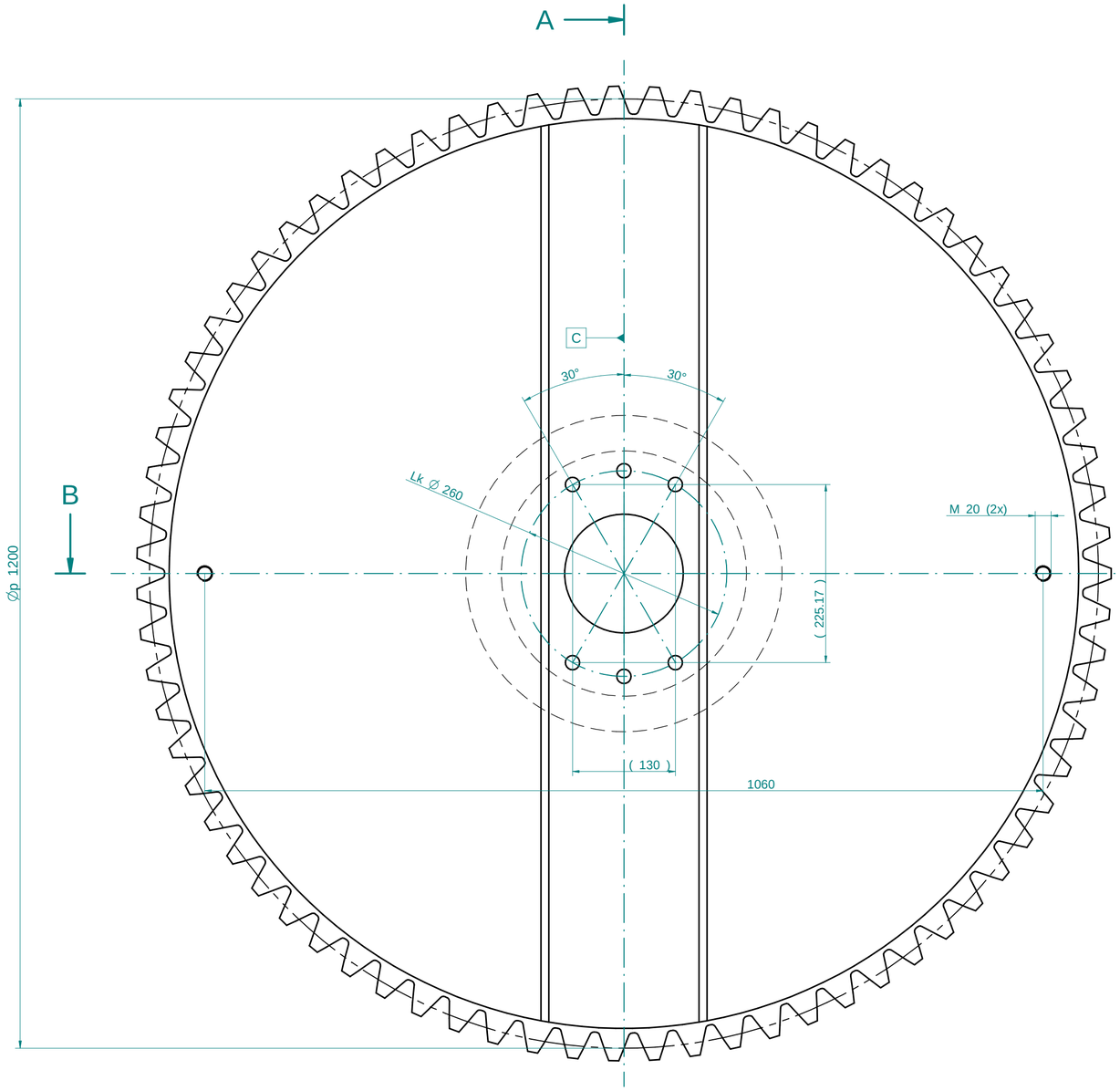

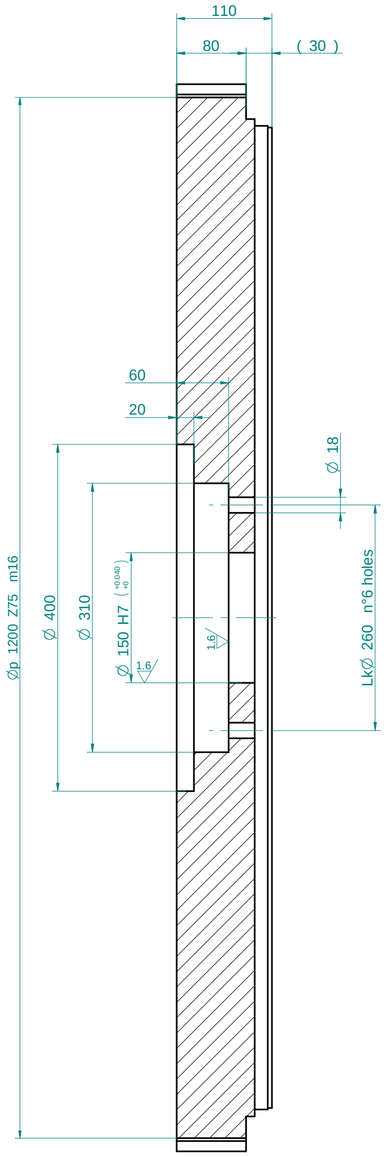

Schnitt / section A-A

Diametral pitch_____1200
Diameter at top_____1232
Angle of ressure_____20°
Addendum_____16
Dedendum_____18.72
Working depth_____32
Total depth_____34.72
Arc pitch tickness_____25.1328
Clearance at top of tooth____2.72
Deep tooth connector_____4
Working wheel base_____760 +1 / +0

Engage with gear dis.n° 910-0391 - Øe 352 Øp320 m=16 - Z=20

In the first assembly position the cog wheel on the trust block's tooth coat of blue paint.

MATERIAL: C50E - 1.1206 (50/55 HRC)

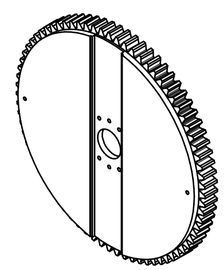

1:20

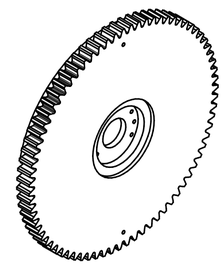

1:20

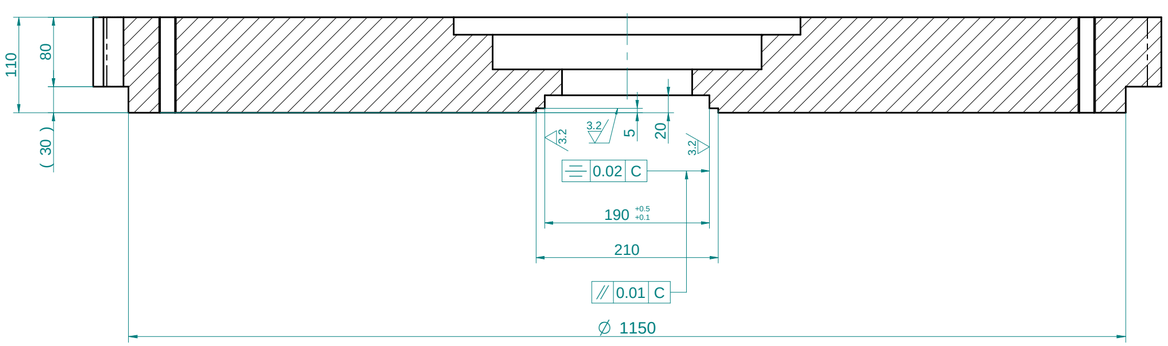

Schnitt / section B-B

Weldings: Z=0,7x lower thickness
Dimensions with no tolerance:H13 - h13
Angles with no tolerance : ±15'
Not dimensioned chamfers:0.2x45°
Not dimensioned radii: R0.2

6.3 (3.2 1.6)

Werkstueckkanten
DIN 6784

+0.2 -0.2

Änd.-Beschreibung: Maß 190P8 mit falscher Toleranz			Name: Peemöller
Änd.-Grund: Fertigung			Datum: 15.03.2018
Schutzvermerk nach DIN ISO 16016 beachten/ observe protection notice DIN ISO 16016	Allgemeintoleranzen/ general tolerance	DIN ISO 2768 - mK	Gewicht/weight (kg): 868,46
	Form- u. Lagetoleranzen/ geometrical tolerances	DIN ISO 1101 DIN ISO 8015	Maßstab/scale: 1:5
	Oberflächen/surfaces	DIN ISO 1302	Format/size: A2
	Werkstückkanten/chamfers	DIN ISO 13715	Werkstoff/material: C50E - 1.1206
			Norm:
			Ursprung/based on:
			Status/status Released
	Datum/date	Name/name	Benennung/description: Zahnrad Z=75
	Erzeugt von/ created	30.03.2011 Mercalli	Gear Z=75 W=110 M=16 Z=75
	Freigegeben von/ released	15.03.2018 Peemöller	
Projektionsmethode/first angle projection	OLBRICH Coating Technology Hamburg		Zeichnungsnummer/drawing number: 910-0392
Prüfmerkmal (SPC)/ significant characteristic			Änderungsstand/ revision: d
			Blatt/ sheet 1
			1 Bl/sheet

Copying of this document, and giving it to others and the use or communication of the contents thereof, are forbidden without express authority. Offenders are liable to the payment of damages. All rights are reserved in the event of the grant of a patent or the registration of a utility model or design.