Sr.#	Description/specification/Cat/Part, No. of Scientific/Technical/Administrative Stores	Qty Reqd (No)
1	Diaphragm for Saunders A type (weir) PFA lined diaphragm valve (molded closed). **Size DN25, Material of construction**: Isobutylene isoprene (IIR) backing with 100% virgin PTFE face. catalogue code: DA 025 PB, See page#04	04
2	Diaphragm for Saunders A type (weir) PFA lined diaphragm valve (molded closed).**Size DN40, Material of construction**: Isobutylene isoprene (IIR) backing with 100% virgin PTFE face. catalogue code: DA 040 PB, See page#04	04
3	Diaphragm for Saunders A type (weir) PFA lined diaphragm valve (molded closed).**Size DN50, Material of construction**: Isobutylene isoprene (IIR) backing with 100% virgin PTFE face. catalogue code: DA 050 PB, See page#04	03
4	Diaphragm for Galassi Ortolani weir type lined diaphragm valve. **Size DN25 Material of construction** EPDM backing with PTFE facing **Valve Model No** GS51, See page#05	42
5	Diaphragm for Galassi Ortolani weir type lined diaphragm valve. **Size DN40 Material of construction** EPDM backing with PTFE facing **Valve Model No** GS51, See page#05	42
6	Diaphragm for Galassi Ortolani weir type lined diaphragm valve. **Size DN50 Material of construction** EPDM backing with PTFE facing **Valve Model No** GS51, See page#05	42
7	Diaphragm for Galassi Ortolani weir type lined diaphragm valve. Size DN40 **Material of construction** EPDM backing with PTFE facing **Valve Model No** GS53, See page#06	20
8	Actuator spring for Galassi Ortolani weir type pneumatic lined diaphragm valve. **Size DN25 Material of construction**: As per OEM standard. **Valve Model No** GS53 **Part#20**, See p#06	30
9	Actuator spring for Galassi Ortolani weir type pneumatic lined diaphragm valve. **Size DN40 Material of construction**: As per OEM standard. **Valve Model No** GS53 **Part#20** See page#06	30
10	Actuator spring for Galassi Ortolani weir type pneumatic lined diaphragm valve. **Size DN50 Material of construction**: As per OEM standard. **Valve Model No** GS53 **Part#20** See page#06	20

11	Actuator V-gasket for Galassi Ortolani weir type pneumatic lined diaphragm valve. Size DN25 **Material of construction**: As per OEM standard. **Valve Model No** GS53 **Part#23** See page#06	30
12	Actuator V-gasket for Galassi Ortolani weir type pneumatic lined diaphragm valve. Size DN40 **Material of construction**: As per OEM standard. **Valve Model No** GS53 **Part#23**, See page#06	30
13	Actuator V-gasket for Galassi Ortolani weir type pneumatic lined diaphragm valve. Size DN50 **Material of construction**: As per OEM standard. **Valve Model No** GS53 **Part#23**, See page#06	20
14	Sleeve for Galassi Ortolani pneumatic pinch valve. Size DN40 **Material**: EPDM. **Valve Model**:GS5 , part#08 See page#07	12
15	Sleeve for Galassi Ortolani pneumatic pinch valve. Size DN50 **Material**: EPDM. **Valve Model**:GS5 , part#08 See page#07	36
16	Sleeve for Galassi Ortolani pneumatic pinch valve. Size DN60 **Material**: EPDM. **Valve Model**:GS5, part#08, See page#07	22
17	Sleeve for Galassi Ortolani pneumatic pinch valve. Size DN70 **Material**: EPDM. **Valve Model**:GS5, part#08, See page#07	12
18	Actuator V-gasket for Galassi Ortolani pneumatic pinch valve. **Valve Size** DN50 **Material**: As per OEM standard **Valve Model**: GS5 , catalogue Part#23 , See page#07	30
19	Actuator V-gasket for Galassi Ortolani pneumatic pinch valve. **Valve Size** DN65 **Material**: As per OEM standard **Valve Model**:GS5 , catalogue Part#23, See page#07	20
20	Actuator springs for Galassi Ortolani pneumatic pinch valve. **Valve Size** DN40 **Material**: As per OEM standard **Valve Model**: GS5 , catalogue Part#20, See page#07	12
21	Actuator springs for Galassi Ortolani pneumatic pinch valve. **Valve Size** DN50 **Material**: As per OEM standard **Valve Model**: GS5 , catalogue Part#20, See page#07	32
22	Actuator springs for Galassi Ortolani pneumatic pinch valve. **Valve Size** DN60 **Material**: As per OEM standard **Valve Model**: GS5 , catalogue Part#20, See page#07	22
23	Actuator springs for Galassi Ortolani pneumatic pinch valve. **Valve Size** DN70 **Material**: As per OEM standard **Valve Model**: GS5 , catalogue Part#20, See page#07	12

Terms and Conditions: Used, faulty, Lot spares are not acceptable.

CATALOGUE CODES

Sub Assembly Manual Bonnets Only

Style

H A

Manual bonnet

A - Weir A Type

Size

mm

Operating Mechanism

Spares Kits	
Plastic Handwheel	S01
Metal Handwheel	S02
Spindle	S03
Aluminium Compressor	S04
CI Compressor	S05
CI Compressor for 214 diaphragm	S06

Bonnet Description	Rubber Diaphragm	PTFE Diaphragm
RHI — Standard Plastic Handwheel	H01	H02
RHI — Standard Metal Handwheel	H03	H04
RHI — Sealed, with Plastic Handwheel	H07	H08
RHI — Sealed, with Metal Handwheel	H09	H10
RHI — Viton Seal and Padlock	H13	H14
RHI — Padlock and Plastic Handwheel	H15	—
RHI — Padlock and Metal Handwheel/Compressor	H17	H18
RHI — GGG 40.3 Plastic Handwheel	H25	—
RHI — SS/EP PES Handwheel	H26	H24
RHI — GGG 40.3 Metal Handwheel	H27	H28
CI Indicator Bonnet	H33	H34
RHI — SS Sealed EP	H45	H46
Gunmetal LG2	H55	—
Non-Rising Gunmetal LG4 and Padlock	H56	—
Non-Rising Gunmetal LG4 with limit open	H57	—

Style

H B

Manual bonnet

B - Straight through KB Type

Size

mm

Operating Mechanism

Spares Kits	Code
Plastic Handwheel	S01
Metal Handwheel	S02
Spindle	S03
CI Compressor	S04

Bonnet Description	Code Rubber Diaphragm
RHI — Standard Plastic Handwheel	H01
RHI — Standard Metal Handwheel	H02
CI Indicator Bonnet	H03
RHI — GGG 40.3 Metal Handwheel	H07
Non-Rising Gunmetal LG4 and Padlock	H08

Diaphragm Spares

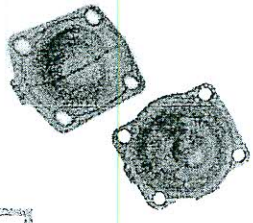

Style

D

Diaphragm

A – Weir A Type
B – Straight through KB Type

Size

mm

Material

PTFE	
214/300	P1
214/425	P2
214/226	P3
214K/425	P7
214S/425	S5
Fluoroelastomer	
226	V1

Natural Rubber	
AA	A1
Q	A2
Neoprene	
HT	N1
EPDM	
XA	XA
EPM	
425	E2
425 vac	E6

Butyl	
300	B1
300 vac	B2
Nitrile	
C	C1
C vac	C2
CSM (formerly Hypalon)	
237	H1
286 fire	H3

Model GS51 HW

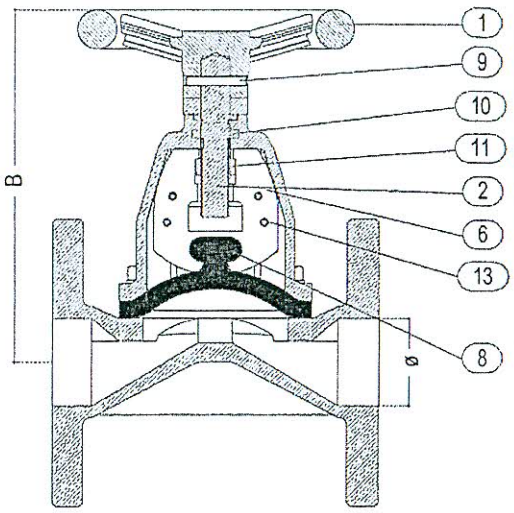

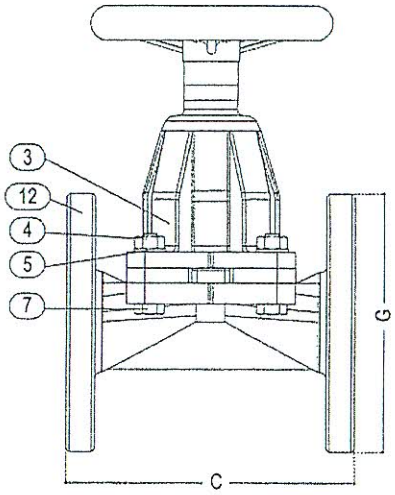

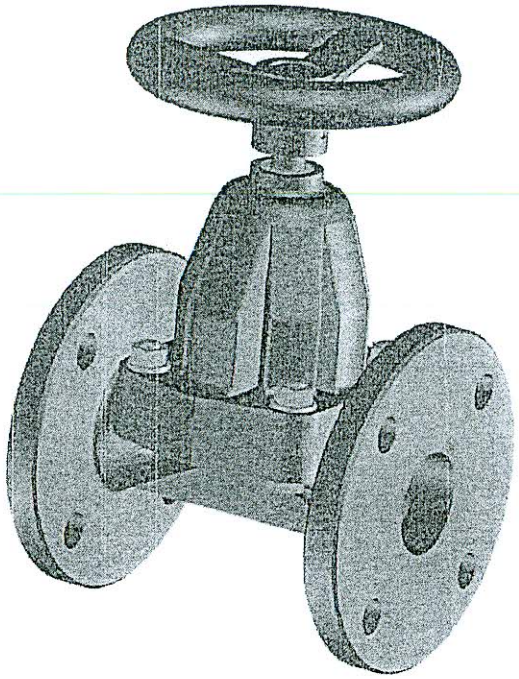

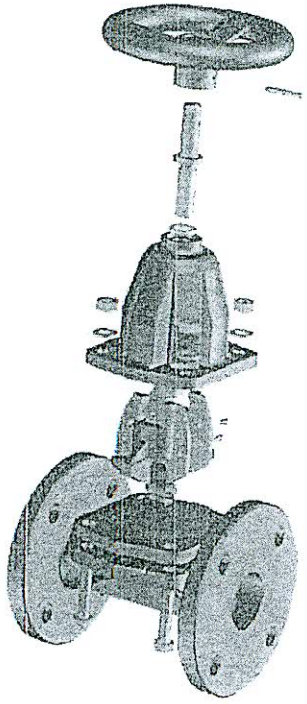

	DETAILS
1	CONTROL WHEEL
2	LEAD SCREW
3	COVER
4	HEXAGON NUT
5	WASHER
6	PLUG
7	STUD BOLT
8	DIAPHRAGM
9	SOCKET
10	GASKET
11	BRONZE NUT
12	VALVE BODY
13	CLAMPING SCREW FOR BUSHING

PRESSURE DETAILS UNI 1284				
DN	P.N.	HYDRAULIC TEST kg/cm² OPEN	HYDRAULIC TEST kg/cm² CLOSE	WORKING PRESSURE kg/cm²
15	14	15	14	13
20	14	15	14	13
25	14	15	14	13
30	13	15	13	12
40	12,5	15	12,5	11,5
50	12,5	15	12,5	11,5
60	11	15	11	10
75	10,5	15	10,5	9,5
100	10,5	15	10,5	9,5
125	9	13	9	8
150	8,7	13	8,7	7,7
200	7	13	7	6
250	6	8	6	6
300	6	8	6	6

NOTE: for different pressure or temperature please ask the Dept.

WEIGHT KG	
C.I. unlined	C.I. ebonite lined
2.300	2.400
3.800	3.900
4.000	4.100
6.600	6.700
8.000	8.300
12.000	12.400
17.000	17.600
23.000	24.000
36.500	98.000
56.000	55.700
76.500	76.200
144.000	142.000
225.000	226.000
330.000	350.000

DIMENSIONS C.I. UNLINED				
Ø	B	C	G (UNI)	G (ASA)
15	87,5	108	95	90
20	112,5	117	105	98
25	117,5	127	115	108
30	135	146	140	118
40	170	159	150	127
50	187,5	190	165	152
60	232,5	217	185	178
75	260	254	200	190
100	315	305	220	229
125	400	356	250	254
150	442,5	406	285	280
200	585	520	340	343
250	655	635	395	406
300	718	749	445	483

DIMENSIONS C.I. EBONITE LINED				
Ø	B	C	G (UNI)	G (ASA)
15	92,5	114	95	90
20	117,5	123	105	98
25	122,5	133	115	108
30	140	152	140	118
40	175	165	150	127
50	192,5	196	165	152
60	237,5	227	185	178
75	265	260	200	190
100	320	313	220	229
125	405	364	250	254
150	447,5	414	285	280
200	590	530	340	343
250	660	645	395	406
300	723	759	445	483

Model GS53 HW

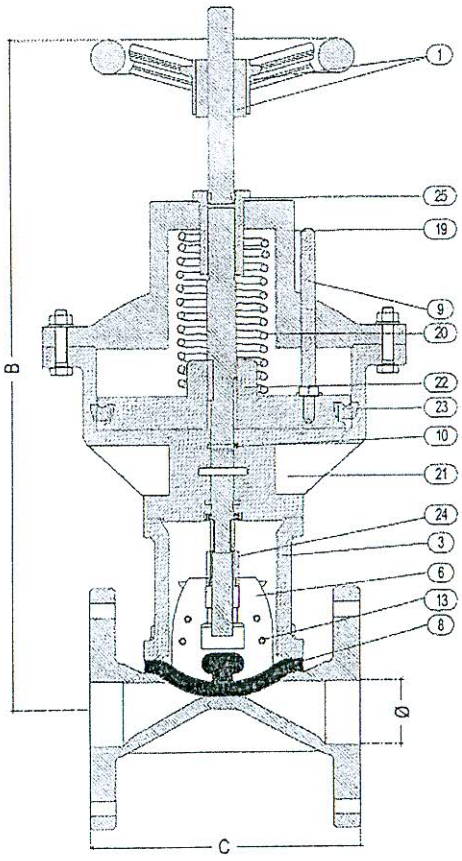

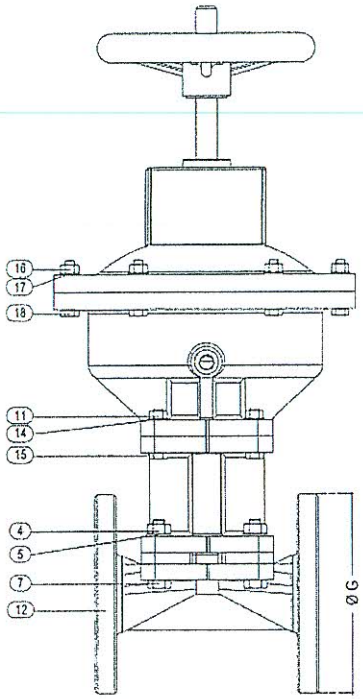

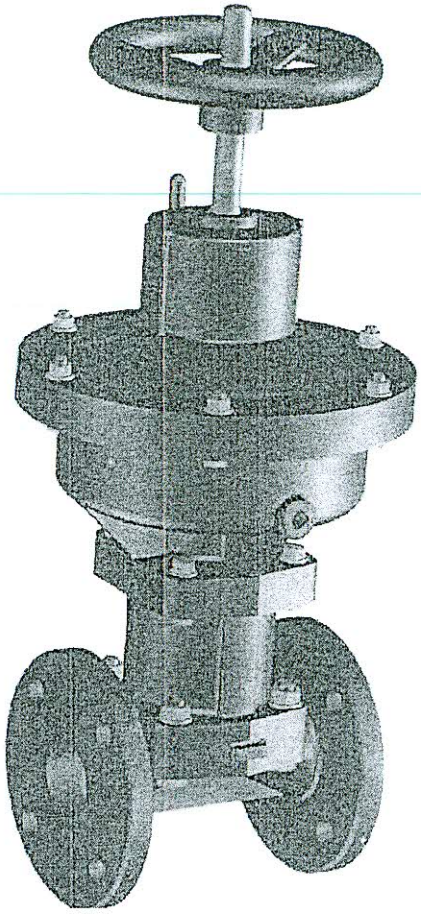

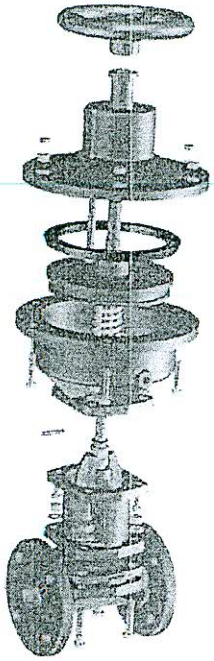

DETAILS	
1	WHEEL AND BUSHING
2	
3	SUPPORT
4	HEXAGON NUT
5	WASHER
6	PLUG
7	HEXAGON BOLT
8	DIAPHRAGM
9	GUIDE PIN
10	"V" GASKET
11	HEXAGON NUT
12	VALVE BODY
13	CLAMPING
14	WASHER
15	HEXAGON BOLT
16	HEXAGON NUT
17	WASHER
18	HEXAGON BOLT
19	COVER
20	SPRINGS
21	CYLINDER
22	PISTON PIN AND LEAD SCREW
23	"V" GASKET
24	BRONZE NUT
25	WHEEL BUSHING

AIR PRESSURE REQUIRED KG/CM²												
dn	20	25	30	40	50	60	75	100	125	150	200	
min.	4	4	4	4	4	4	3,5	3,5	3	3	2,5	
max.	6	6	6	6	6	6	5	5	5	4	4	

PRESSURE DETAILS UNI 1284				
DN	P.N.	HYDRAULIC TEST kg/cm² OPEN	HYDRAULIC TEST kg/cm² CLOSE	WORKING PRESSURE kg/cm²
20	4,5	15	4,5	4
25	4,5	15	4,5	4
30	4,5	15	4,5	4
40	4,5	15	4,5	4
50	4	15	4	3
60	4	15	4	3
75	4	15	4	3
100	3,5	15	3,5	2,5
125	3,5	13	3,5	2,5
150	3	13	3	2
200	2,5	13	2,5	1,5

NOTE: For higher pressure please check with factory

WEIGHT KG	
C.I. unlined	C.I. ebonite lined
7,800	8,000
8,500	8,500
12,400	12,500
14,000	14,500
19,500	20,500
26,000	27,000
34,000	35,000
54,500	55,500
76,000	77,000
94,000	96,000
185,000	187,000

DIMENSIONS C.I. UNLINED				
Ø	B	C	G (UNI)	G (ASA)
20	330	117	105	98
25	330	127	115	108
30	380	146	140	118
40	450	159	150	127
50	470	190	165	152
60	500	217	185	178
75	600	254	200	190
100	710	305	220	229
125	800	356	250	254
150	870	406	285	280
200	1130	520	340	343

DIMENSIONS C.I. EBONITE LINED				
Ø	B	C	G (UNI)	G (ASA)
20	330	123	105	98
25	330	133	115	108
30	380	152	140	118
40	450	165	150	127
50	470	196	165	152
60	500	227	185	178
75	600	260	200	190
100	710	313	220	229
125	800	364	250	254
150	870	414	285	280
200	1130	530	340	343

Model GS5

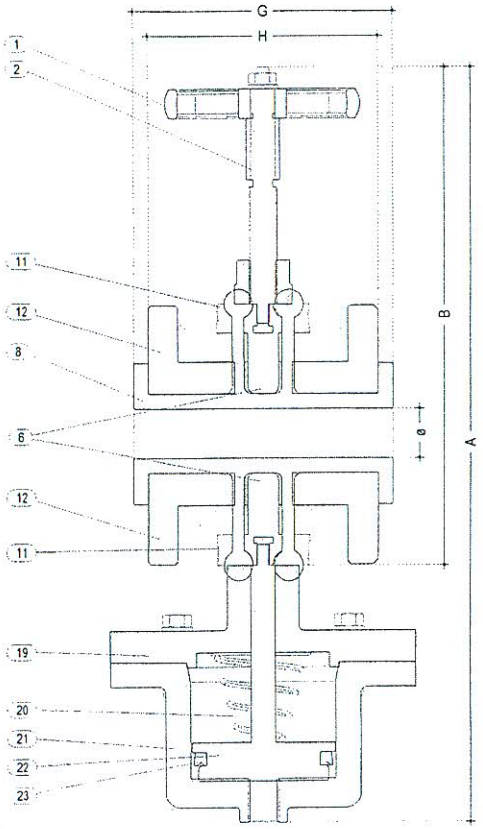

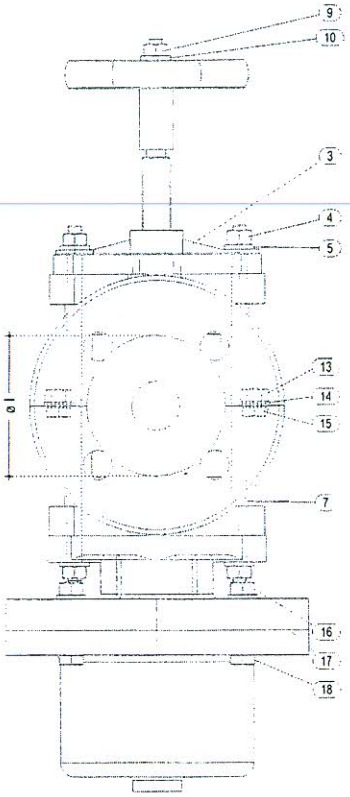

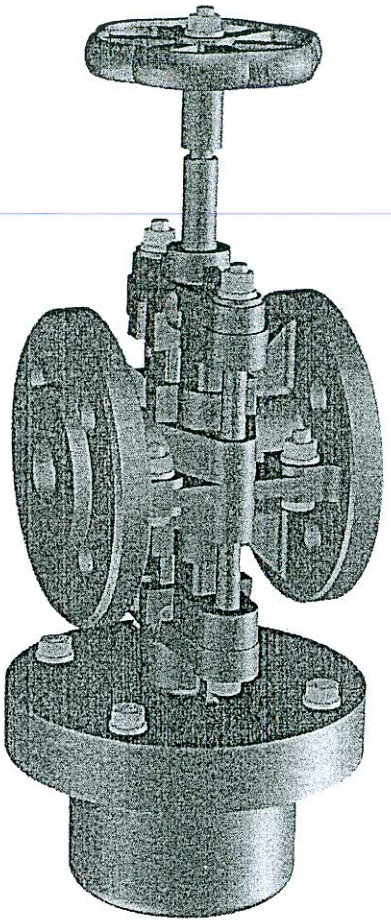

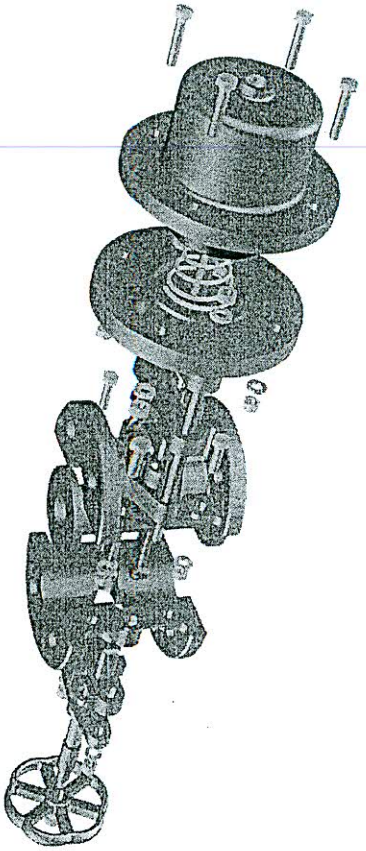

DETAILS	
1	WHEEL
2	LEAD SCREW
3	SUPPORT
4	HEXAGON NUT
5	WASHER
6	PLUG
7	TIE ROD
8	RUBBER SLEEVE
9	HEXAGON NUT
10	WASHER
11	RETURN BUSHING BRONZE
12	VALVE BODY
13	HEXAGON NUT
14	WASHER
15	HEXAGON BOLT
16	HEXAGON NUT
17	WASHER
18	HEXAGON NUT
19	SUPPORT AND CYLINDER
20	SPRING
21	CYLINDER
22	PISTON AND DRIVE PIN
23	PISTON GASKET
24	RUBBER TUBE

PRESSURE DETAILS UNI 1284				
DN	PN	HYDRAULIC TEST kg/cm² OPEN	HYDRAULIC TEST kg/cm² CLOSE	WORKING PRESSURE kg/cm²
20	5	10	5	4
25	5	10	5	4
30	5	10	5	4
40	5	10	5	4
50	5	10	5	4
60	5	10	5	4
70	5	10	5	4
80	5	10	5	3
90	5	10	5	3
100	4	10	4	3
125	4	10	4	3
150	4	8	4	3
175	4	8	4	3
200	4	8	4	3

NOTE: For other pressure details please refer to the DIN

AIR PRESSURE REQUIRED KG/CM²														
dn	20	25	30	40	50	60	70	80	90	100	125	150	175	200
min	4	4	4	4	4	4	4	3.5	3.5	3.5	3.5	3.5	3.5	3.5
max	6	6	6	6	5	5	5	4.5	4.5	4.5	4.5	4.5	4.5	4.5

WEIGHT KG	
ALUMINIUM	GI
3.000	5.000
4.500	6.000
5.200	8.000
7.200	12.200
9.000	13.000
12.000	19.000
13.500	21.000
15.000	23.000
23.000	25.000
23.000	35.000
33.000	52.000
45.500	65.000
54.000	75.000
61.000	94.500

DIMENSIONS					
Ø	A	B	C	H	L
20	310	265	102	95	58
25	345	220	118	105	68
30	380	245	130	115	78
40	445	300	152	140	88
50	495	330	176	160	102
60	525	350	194	180	120
70	565	280	206	190	137
80	605	410	215	195	148
90	665	450	250	232	170
100	715	490	275	260	178
125	850	600	300	280	198
150	954	650	350	300	242
175	1035	740	365	325	269
200	1142	800	375	350	295