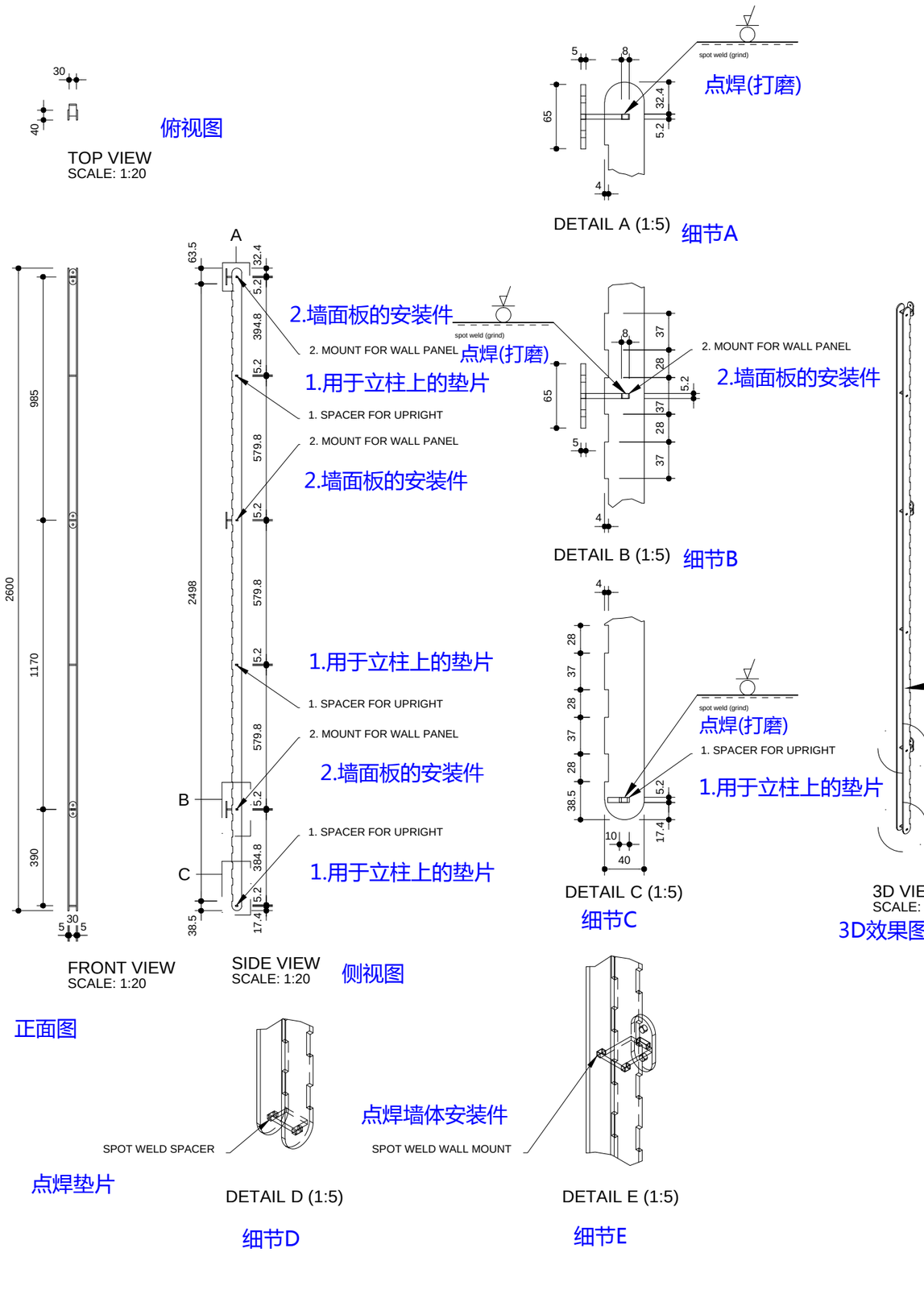

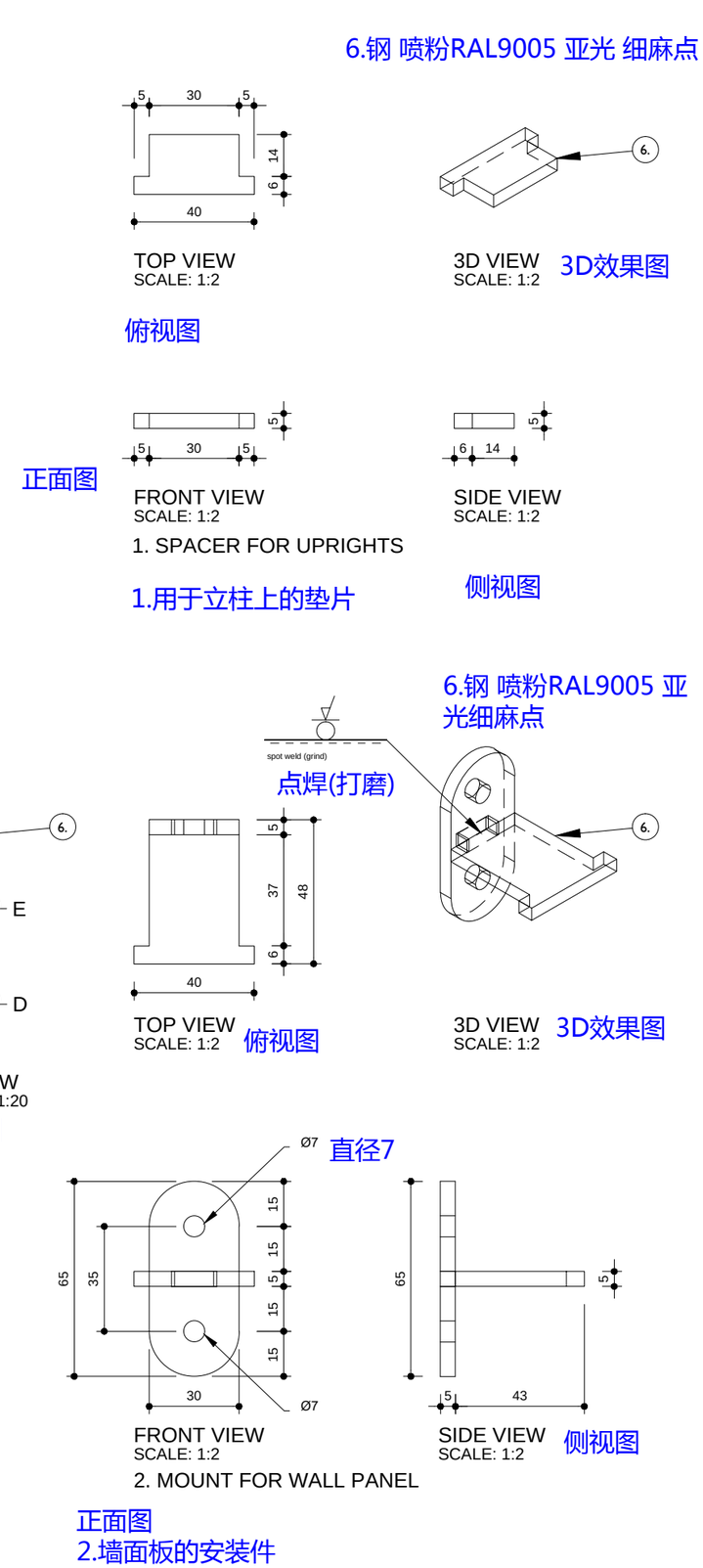

MATERIALS DESCRIPTION

Scotch & Soda Stores

Pos.	Sample Nbr.	Finish name
1	SC-WD-03	Solid Oak - Dark Stain (B1)
2	SC-WD-04	MDF Naturel (B1)
3	SC-WD-05	Plywood
4	SC-WD-10	Solid Oak - Ral 9005 Coat 15%
5	SC-WD-11	Solid Oak - Ral 9016 Coat 15%
6	SC-ME-01	Metal - RAL 9005 Matte Fine Structure
7	SC-ME-02	Aged Brass
8	SC-ME-03	Aged Brass Plated Metal
9	SC-ME-04	Zinc Coated Steel
10	SC-ME-05	Metal RAL 9005 - 30%
11	SC-ME-06	Metal - RAL 9016 Matte Fine Structure
12	SC-GL-01	Strengthened Clear Glass
13	SC-MI-05	Brown Leather
14	SC-MI-10	Brass Knuckle

Note: Please refer to detailed material overview for additional specifications

Rev.	Date	Drawn	Check	Description

Project:
SCOTCH & SODA

Article No.:
SCO1101

Article Name:
WALL PANEL - STEEL UPRIGHT 2600mm

Reference No.:
-

APPROVED

SCOTCH&SODA®
AMSTERDAM COUTURE

Variations on dimensions without tolerance values are according ISO 2768 mK

Units: mm	Drawn: KvD	Size: A3
Scale: 1:20	Date: 03-12-2013	Sheet: 1/1

This drawing remains our property and must be returned immediately at our request.
It is prohibited to distribute or show this drawing to any third party or company.
This drawing is copyrighted and any unauthorized use, distribution, reproduction or modification is illegal and must be compensated

imagebuilders // global shopfitters