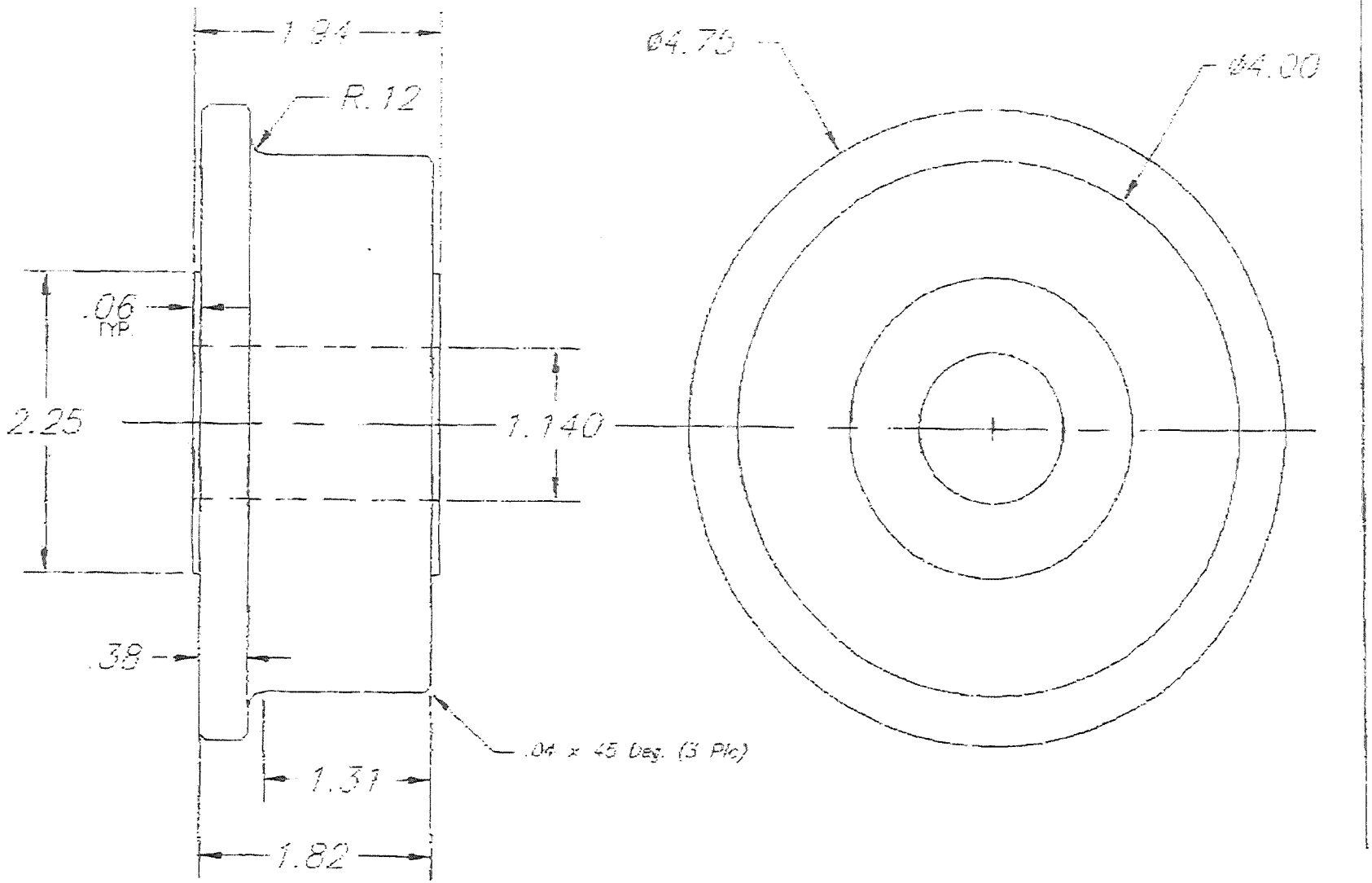

Rc 45 - 50 .06 Min Deep.
Hardened

STANDARD AND CUSTOM
CONVEYOR BELTING
FOR BOTH O.E.M. AND
REPLACEMENT MARKETS

UNLESS OTHERWISE SPECIFIED FRACTIONS: ± 1/64 .XX ± .010 .XXX ± .005 ANGULAR: ± 1 DIAMETERS TO BE CONCENTRIC WITHIN 0.0015 T.I.R.	TITLE: 9F4 Roller	DATE: May 9, 2001
	DRAWN BY: R. Hennis	DRAWING NO: 9F4ROLLER
	SCALE: FULL	CHECKED BY:

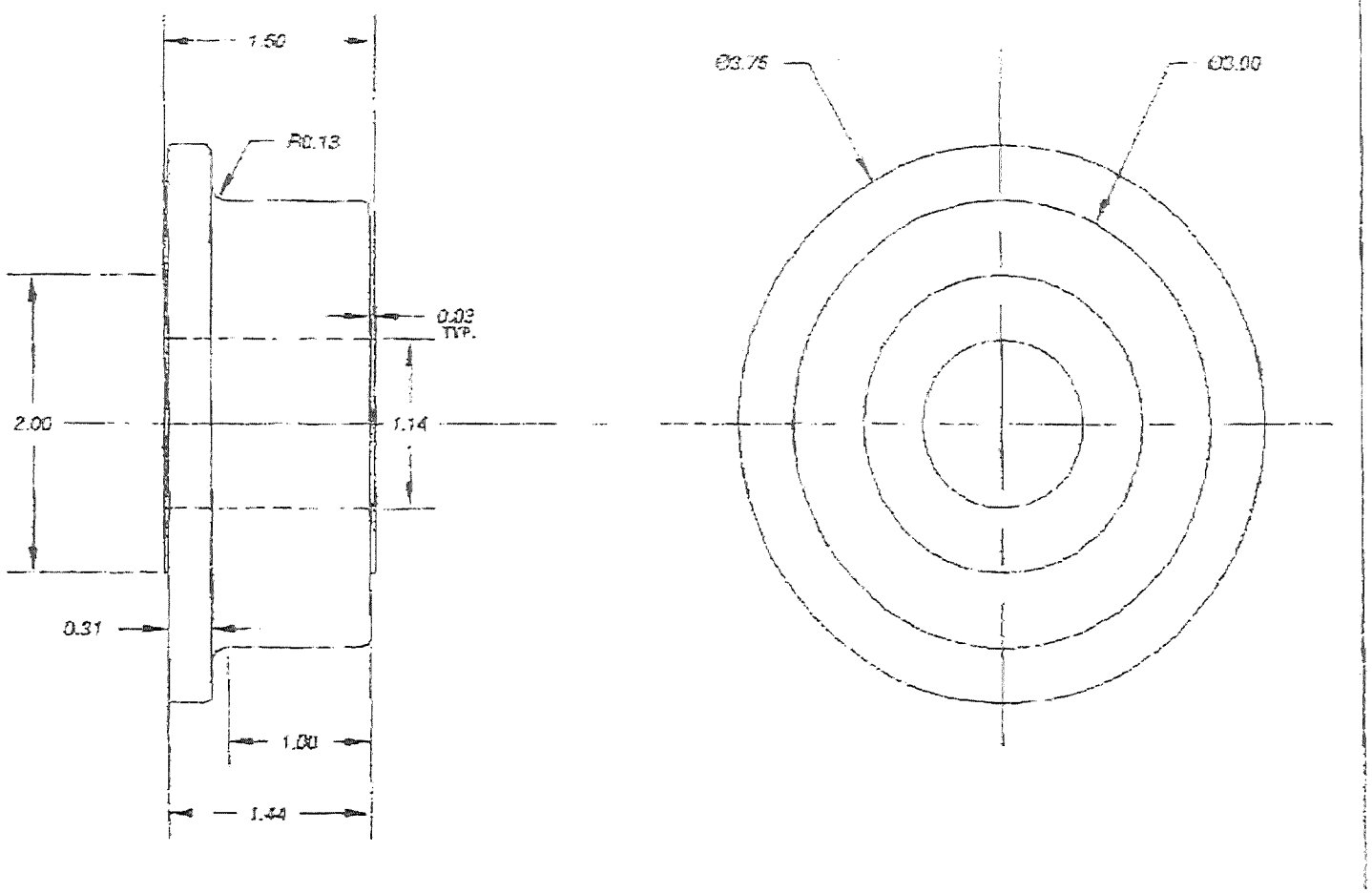

Rc 45 - 50 .06 Min Deep.
Hardened

STANDARD AND CUSTOM
CONVEYOR BELTING
FOR BOTH C.E.B. AND
REPLACEMENT MARKETS

UNLESS OTHERWISE SPECIFIED FRACTIONS: = 1/64 .XX = ± .010 .XXX = ± .005 ANGULAR = ± 1 DIAMETERS TO BE CONCENTRIC WITHIN 0.005 T.I.R.	TITLE: SE3 Roller	DATE: Nov 9, 2001
	DRAWN BY: R. Hinnis	DRAWING NO: SE3ROLLER
	SCALE: FULL	CHECKED BY: